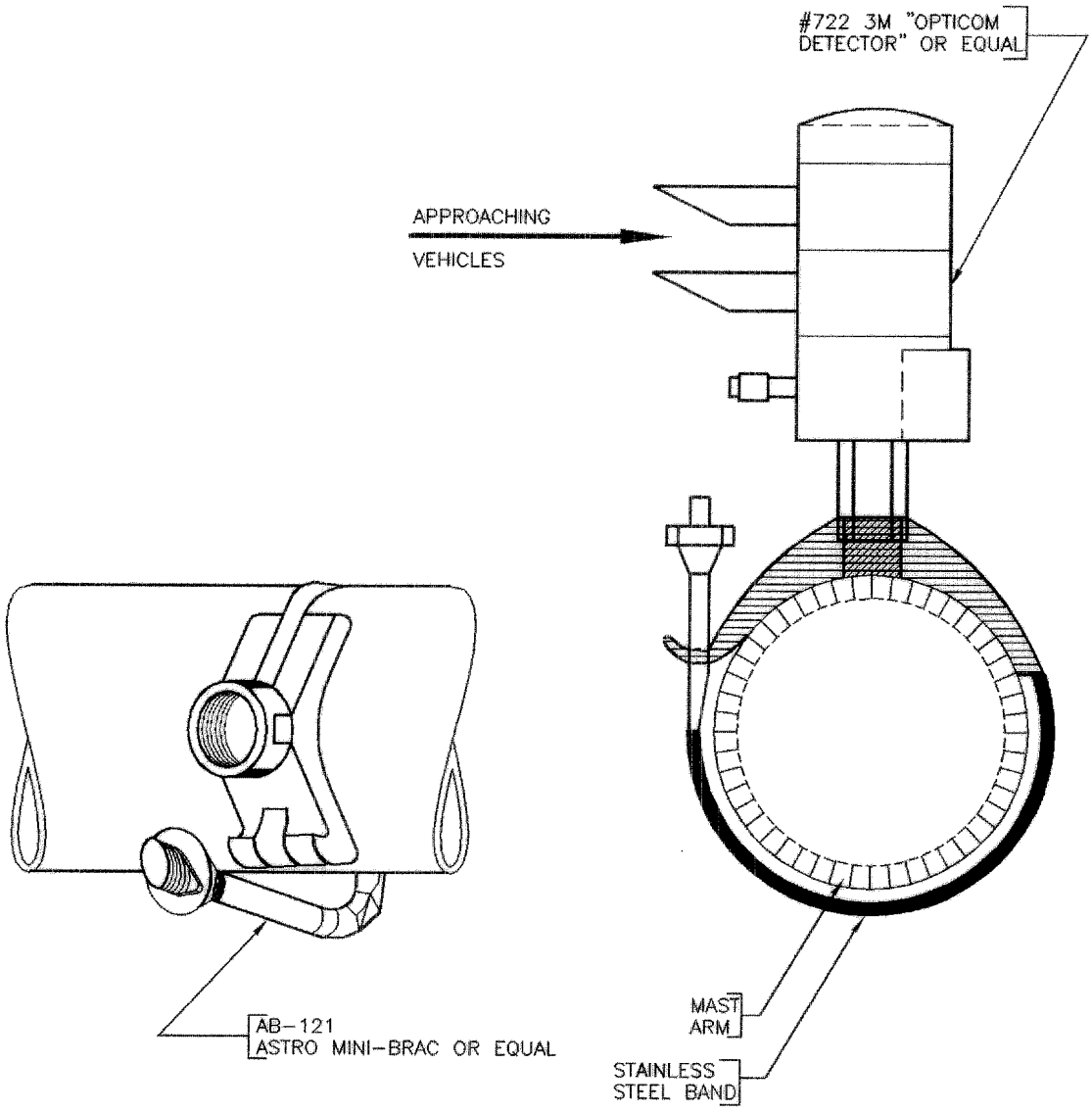

EMERGENCY VEHICLE PRE-EMPTION (EVPE) DETECTOR

NO SCALE — MOUNTING DETAILS

Revised:	Original approval date: 3-29-83	CITY OF CHULA VISTA
3-22-00 CVM	Redrawn By: ARR Date: 7-26-95	PUBLIC WORKS DEPARTMENT
	CITY ENGINEER Date: 11-7-02	EVPE DETECTOR — CVCS 12