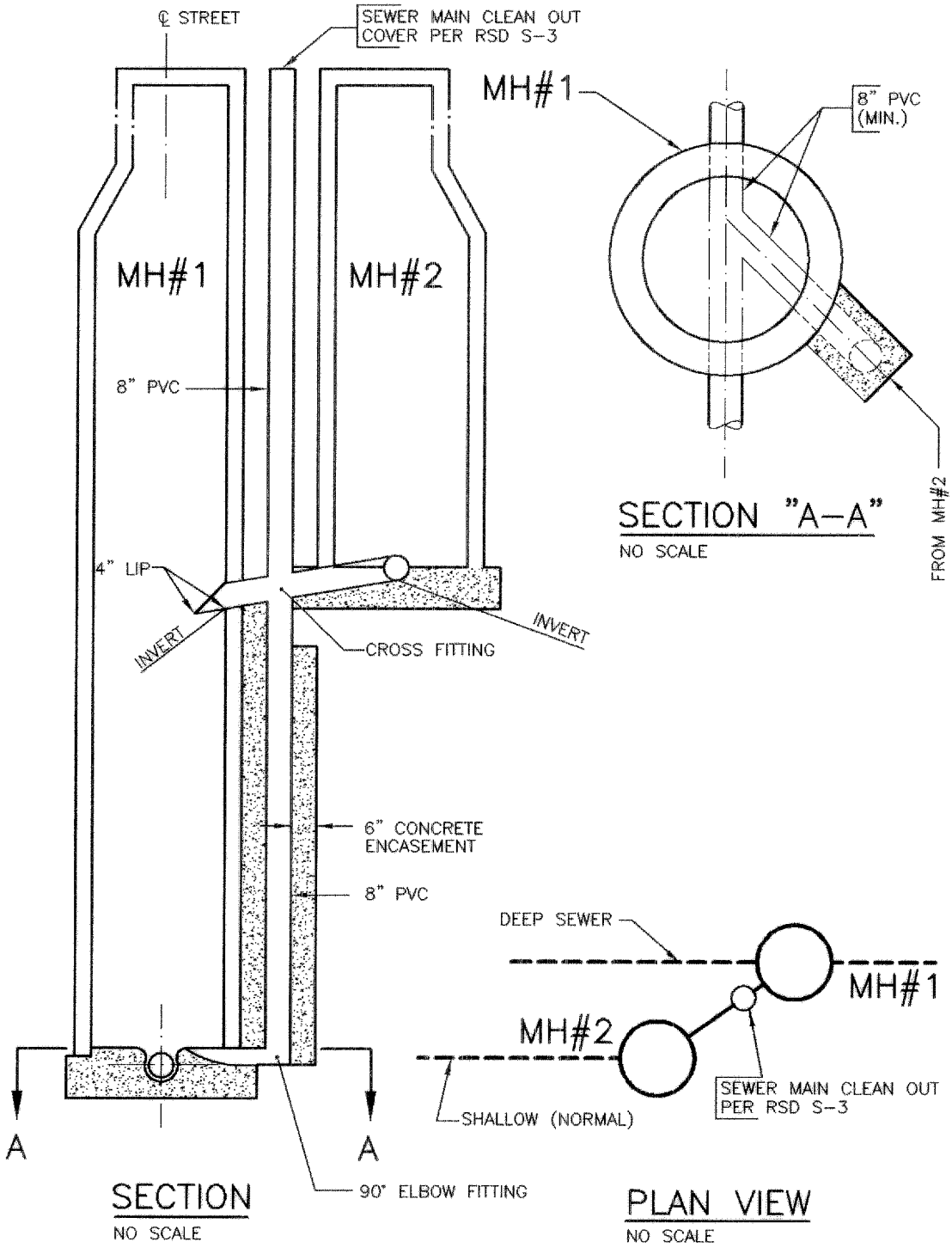

NOTE: OTHER OPTIONS AVAILABLE ON A CASE-BY-CASE BASIS.

Revised:	Original approval date: 2-13-90		CITY OF CHULA VISTA PUBLIC WORKS DEPARTMENT
9-12-01 CVM	Redrawn By: ARR	Date: 7-26-95	
	Clifford Swanson		DEEP SEWER CONNECTION
	CITY ENGINEER Date: 11-7-02		CVCS 14