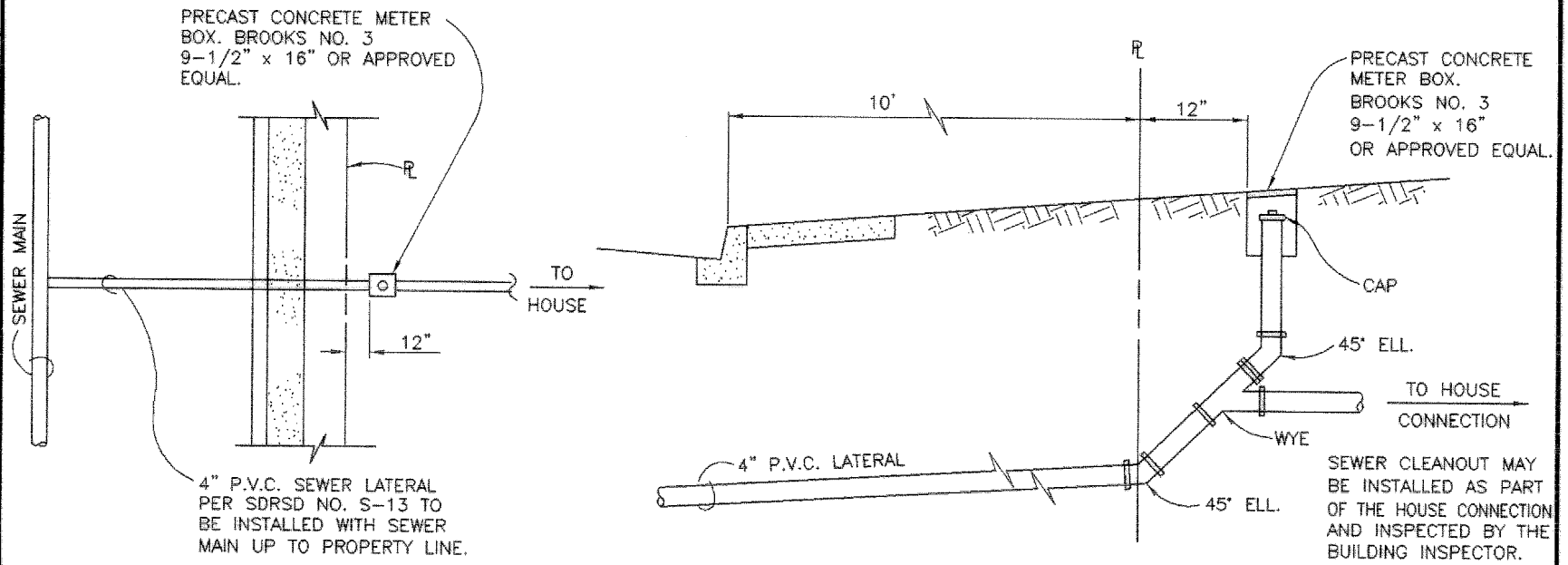

FOR DETAILS NOT SHOWN SEE SDRSD NO. S-13 AND S-14

PLAN VIEW

NO SCALE

PROFILE

NO SCALE

DETAIL ~ SEWER LATERAL IN LANDSCAPED AREAS

NOTE: BACKFLOW PREVENTION DEVICES AND BUILDING CLEANOUT SHALL BE LOCATED WITHIN THE BUILDING DRAIN PER UPC REQUIREMENTS. STAMP "S" ON FACE OF CURB.

Revised:	Original approval date: 10-18-96	CITY OF CHULA VISTA PUBLIC WORKS DEPARTMENT
6-12-97 CM	Redrawn By: CVM Date: 10-18-96	SEWER LATERAL IN LANDSCAPED AREAS
9-06-01 CM	CITY ENGINEER Date: 11-7-02	CVCS 20