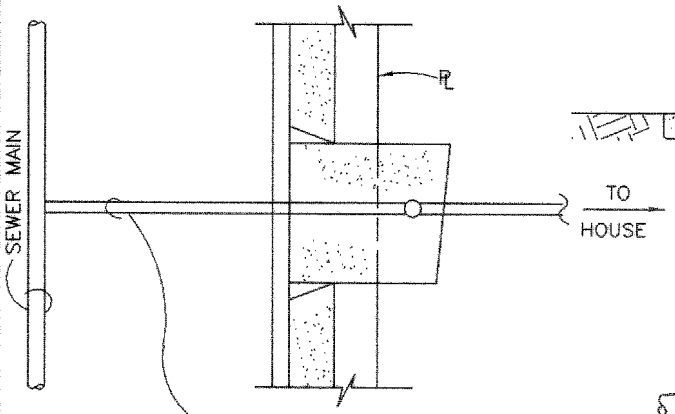

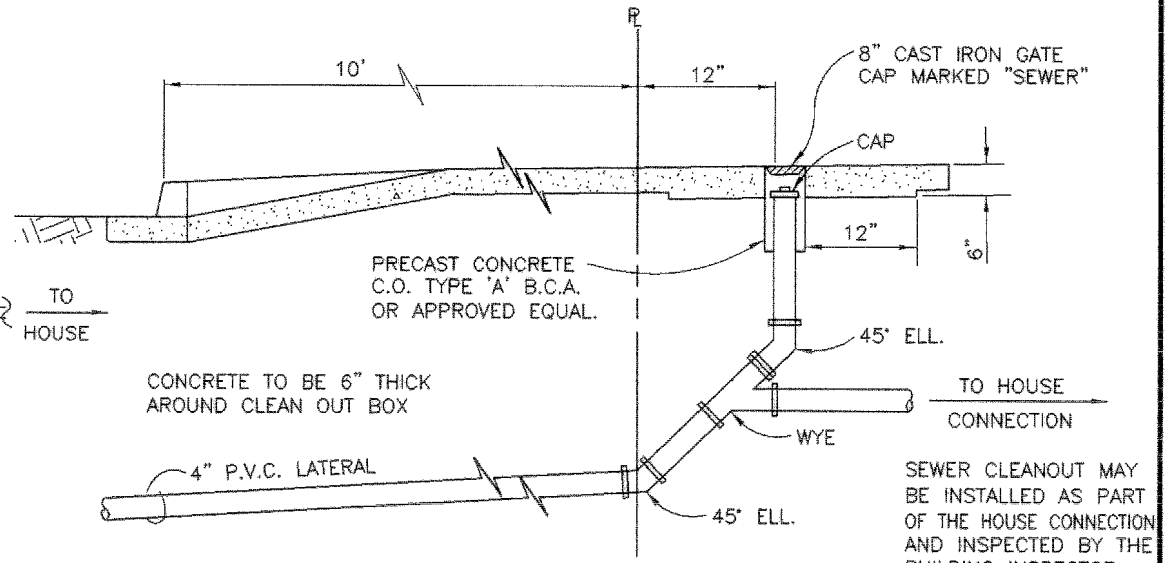

FOR DETAILS NOT SHOWN SEE SDRSD NO. S-13 AND S-14

PLAN VIEW

NO SCALE

PROFILE

NO SCALE

DETAIL ~ SEWER LATERAL IN P.C.C. DRIVEWAY

NOTE: BACKFLOW PREVENTION DEVICES AND BUILDING CLEANOUT SHALL BE LOCATED WITHIN THE BUILDING DRAIN PER UPC REQUIREMENTS. STAMP "S" ON FACE OF CURB.

Original approval date: 10-18-96	Revised:	
Redrawn By: CVM Date: 10-18-96	6-12-97 CM	
	9-06-01 CM	

CITY ENGINEER Date: 11-7-02

CITY OF CHULA VISTA
PUBLIC WORKS DEPARTMENT

SEWER LATERAL IN
P.C.C. DRIVEWAY

CVCS
21