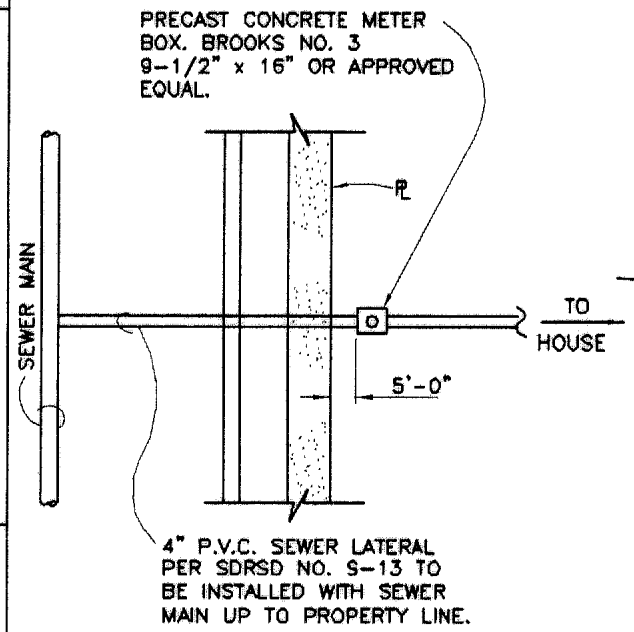

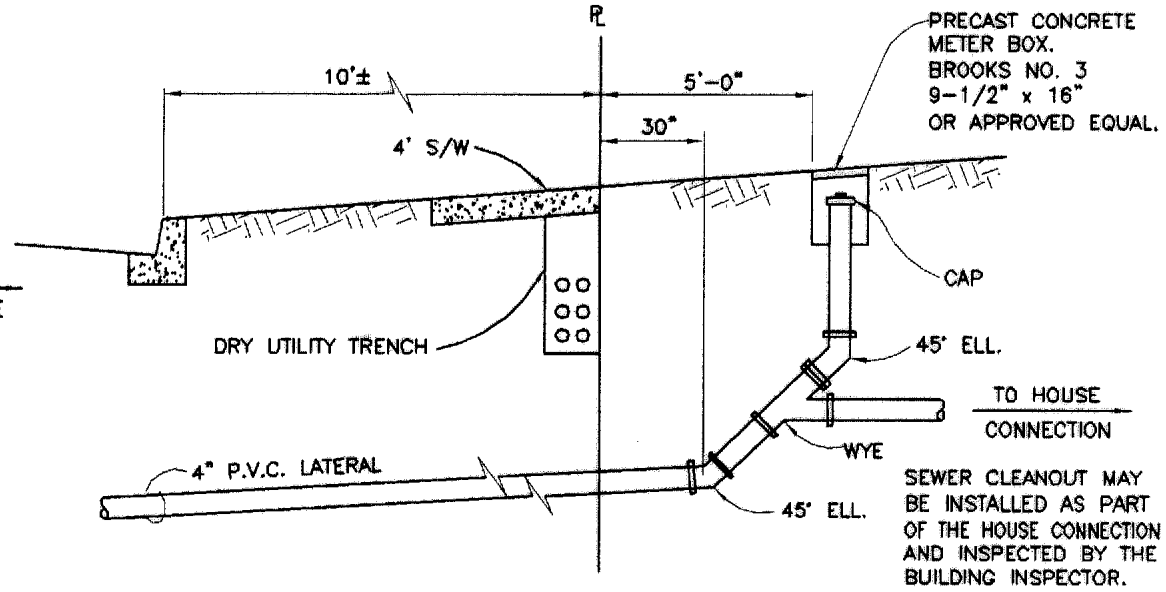

FOR DETAILS NOT SHOWN SEE SDRSD NO. S-13 AND S-14

PLAN VIEW
NO SCALE

PROFILE
NO SCALE

DETAIL ~ SEWER LATERAL IN LANDSCAPED AREAS
(SIDEWALK AND DRY UTILITY TRENCH AT PROPERTY LINE)

NOTE: BACKFLOW PREVENTION DEVICES AND BUILDING CLEANOUT SHALL BE LOCATED WITHIN THE BUILDING DRAIN PER UPC REQUIREMENTS OR PER CITY PLANNING AND BUILDING REQUIREMENTS
STAMP "S" ON FACE OF CURB.

Revised:		
CVM 12-9-99		
CVM 9-6-01		
Original Approval	Date: 7-29-99	
Drawn By: CVM	Date: 7-29-99	
CITY ENGINEER	Date: 11-7-02	

CITY OF CHULA VISTA
PUBLIC WORKS DEPARTMENT

SEWER LATERAL IN LANDSCAPED AREAS
(S/W & DRY UTILITIES AT P.L.)

CVCS
22