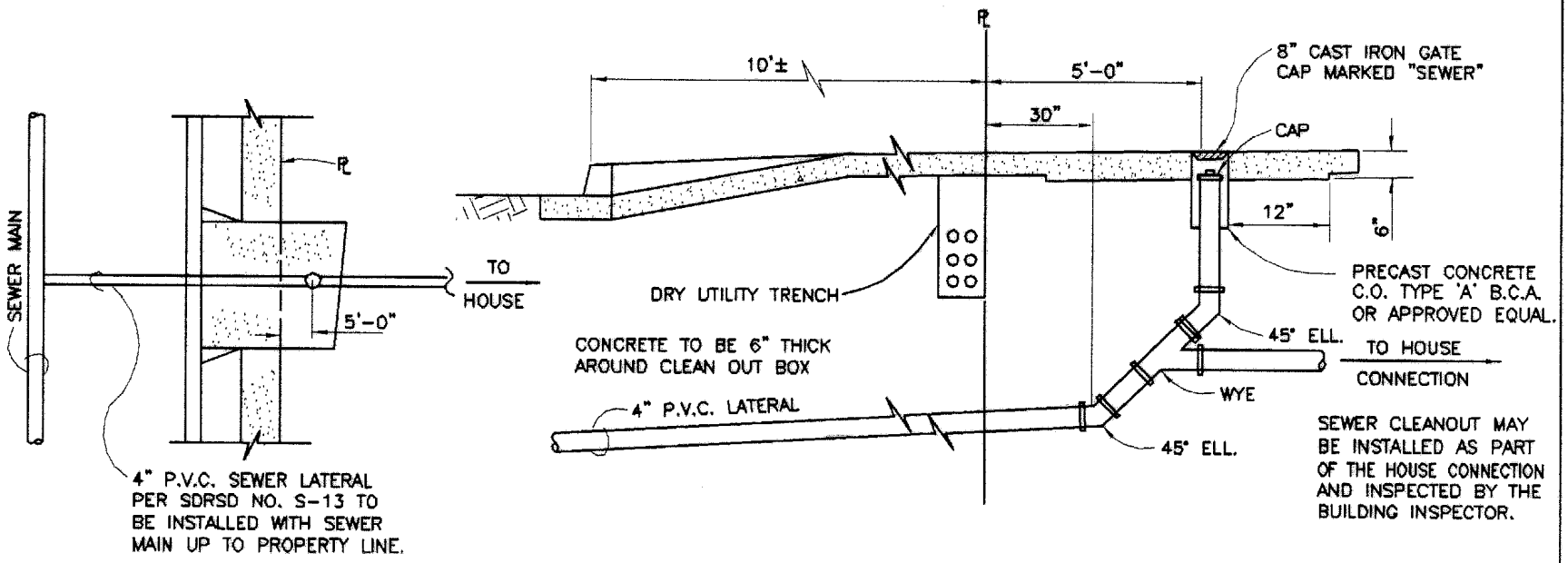

FOR DETAILS NOT SHOWN SEE SDRSD NO. S-13 AND S-14

PLAN VIEW
NO SCALE

PROFILE
NO SCALE

DETAIL ~ PRIVATE SEWER LATERAL IN P.C.C. DRIVEWAY

(SIDEWALK AND DRY UTILITY TRENCH AT PROPERTY LINE)

NOTE: BACKFLOW PREVENTION DEVICES AND BUILDING CLEANOUT SHALL BE LOCATED WITHIN THE BUILDING DRAIN PER UPC REQUIREMENTS OR PER CITY PLANNING AND BUILDING REQUIREMENTS
STAMP "S" ON FACE OF CURB.

Revised:		
CVM 12-9-99	Original Approval	Date: 7-29-99
CVM 9-6-01	Drawn By: CVM	Date: 7-29-99
	CITY ENGINEER	Date: 11-7-02

CITY OF CHULA VISTA
PUBLIC WORKS DEPARTMENT

SEWER LATERAL IN P.C.C. DRIVEWAY
(S/W & DRY UTILITIES AT P.L.)

CVCS
23