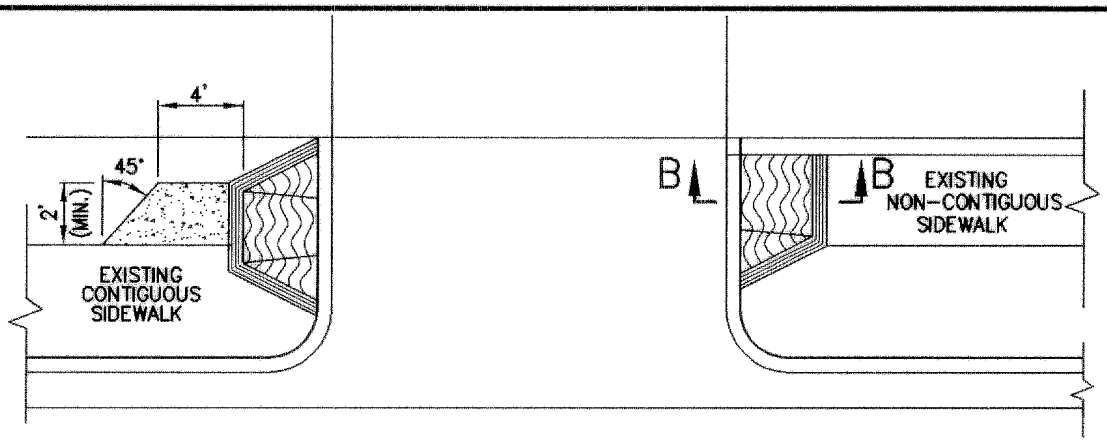

PLAN

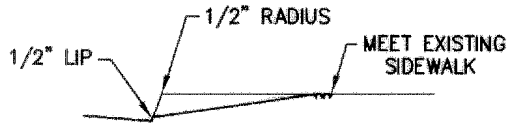

SECTION B–B

*MODIFIED PER ADA REQUIREMENTS

X	Y	Z*
CURB HEIGHT	RAMP LENGTH	SIDE SLOPE
6	5'–6"	4'–7"
7	6'–6"	5'–5"
8	7'–6"	6'–3"

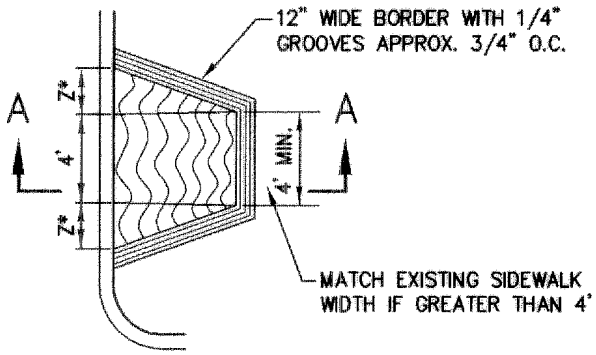

PLAN

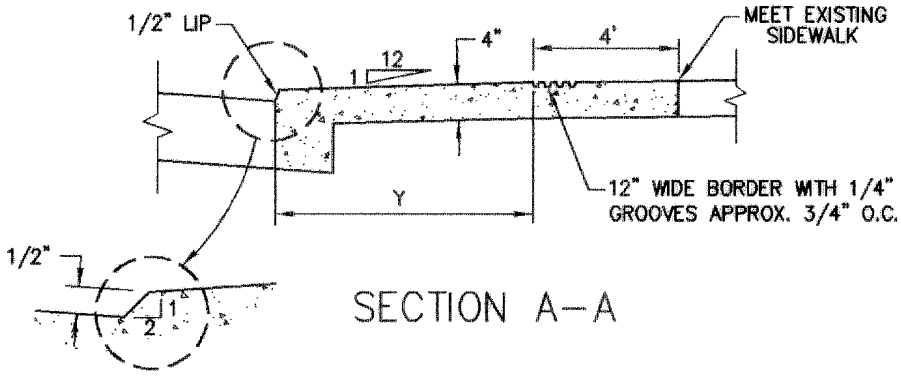

SECTION A–A

NOTE:
SEE CVCS–29 FOR GENERAL NOTES.

NOT TO SCALE

Revised:	Original approval date: 3-23-94	CITY OF CHULA VISTA PUBLIC WORKS DEPARTMENT	
	Redrawn By: CVM Date: 8-21-01		
	Clifford Swanson	PEDESTRIAN RAMP DETAIL TYPE "D" MODIFIED	CVCS 28
	CITY ENGINEER Date: 11-7-02		