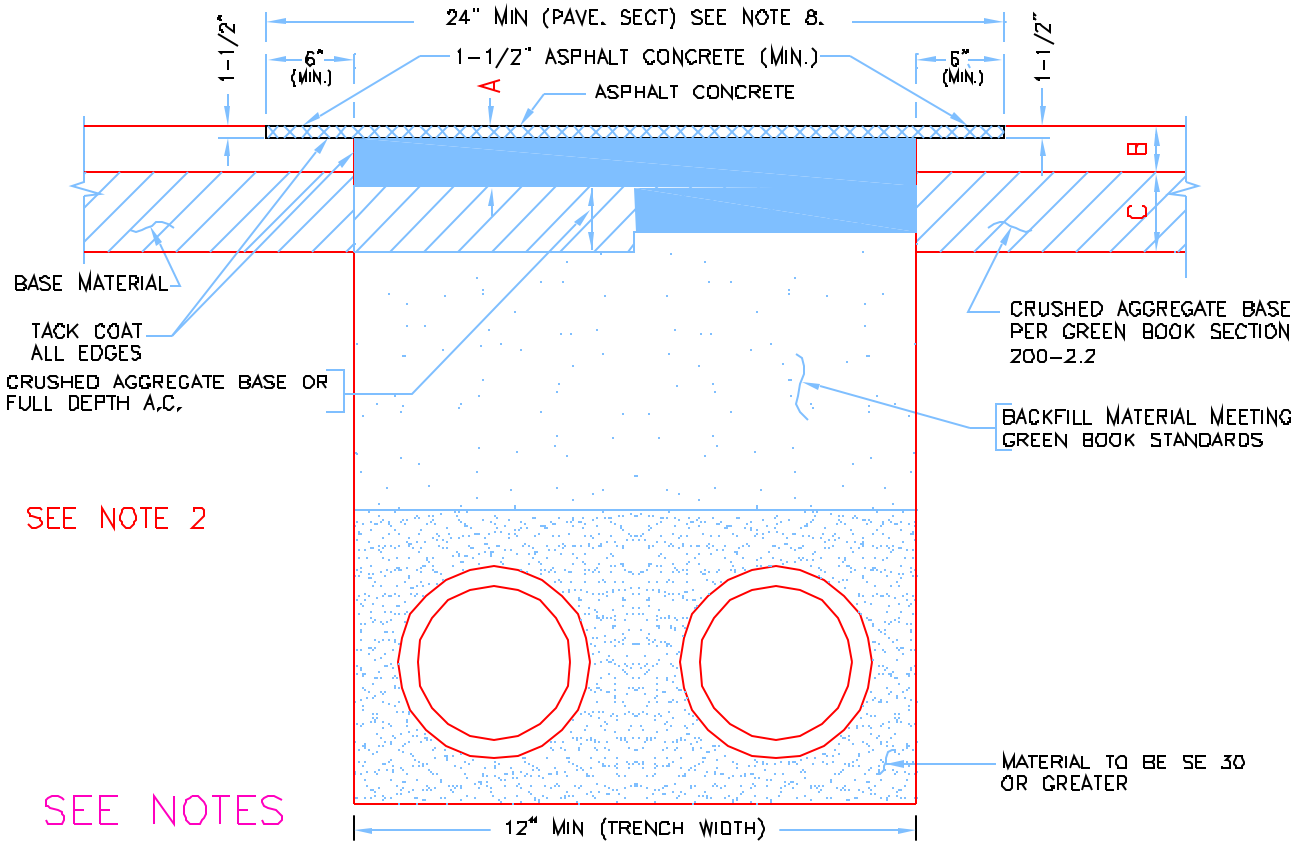

SEE NOTES CVCS-4

TYPE "J"

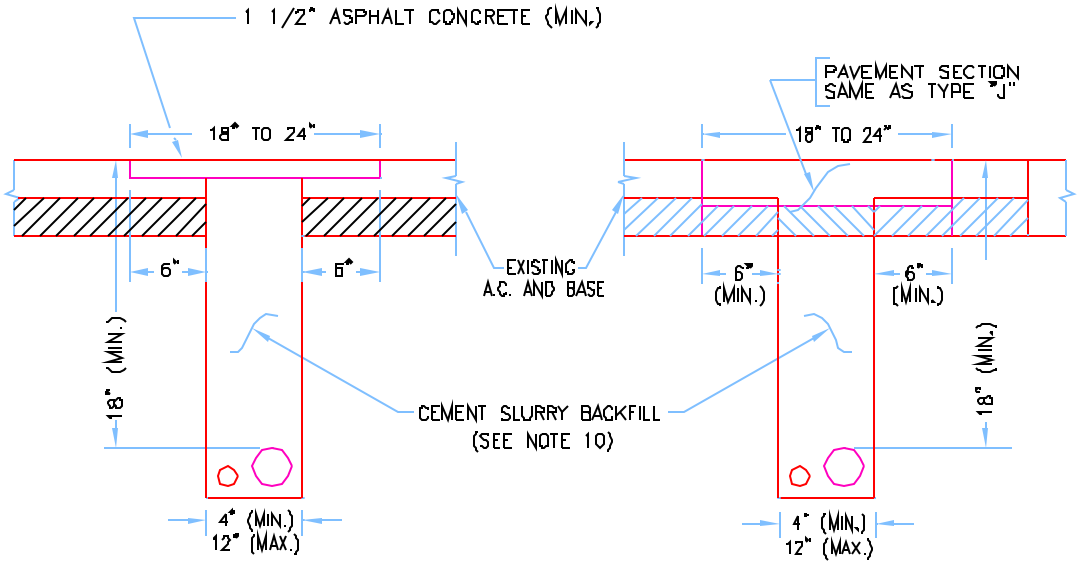

TYPE "I- (1)" TYPE "I- (2)"

Revised:	Original approval date: 2-13-90	CITY OF CHULA VISTA	
CVM 8-03-01	Redrawn By: ARR Date: 7-26-95	PUBLIC WORKS DEPARTMENT	
		TRENCH BACKFILL AND SURFACE RESTORATION TYPES "I" AND "J"	CVCS 3
	CITY ENGINEER Date:		