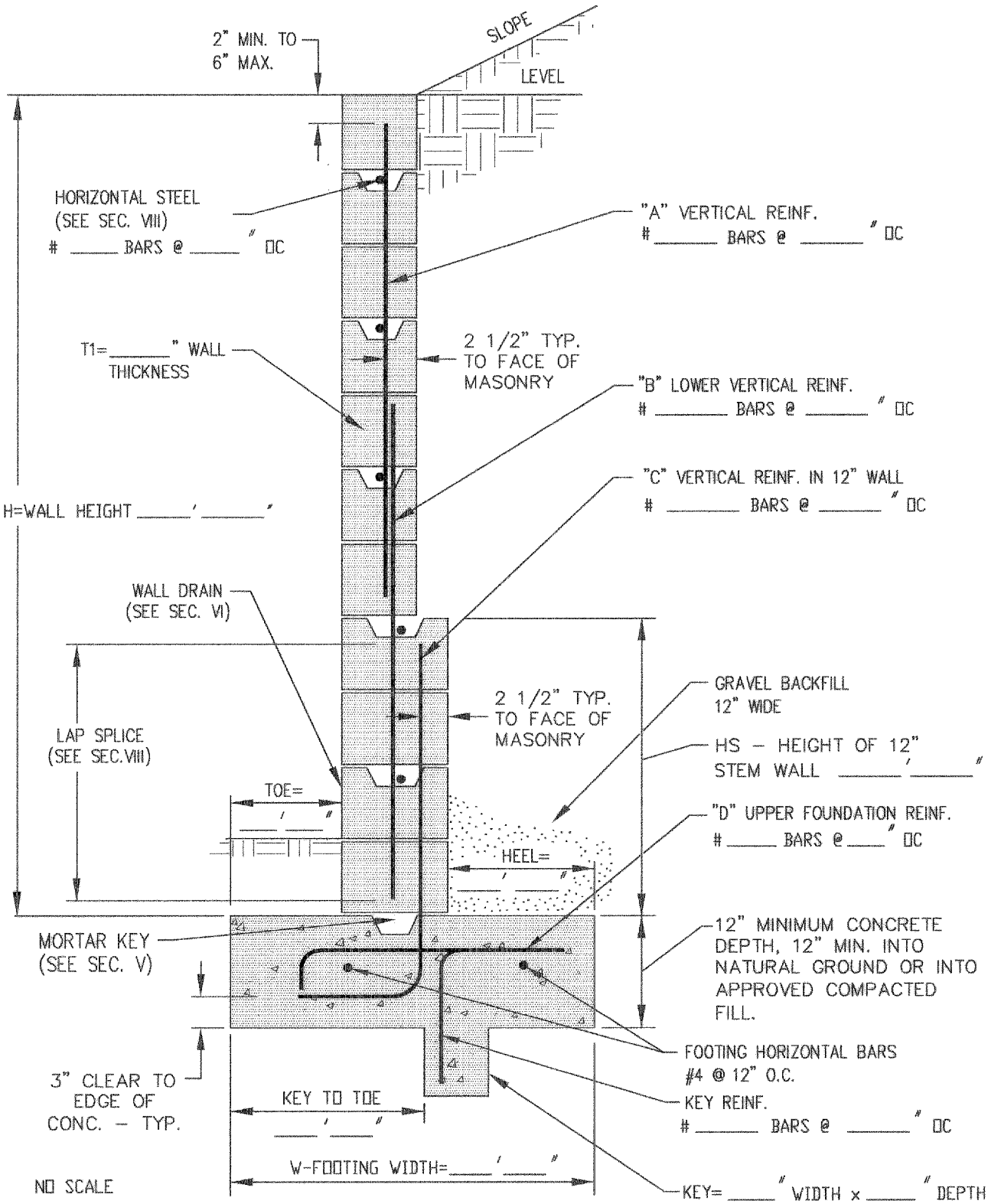

Revised:	Original approval date: 8-17-01	CITY OF CHULA VISTA PUBLIC WORKS DEPARTMENT	
	Redrawn By: CVM Date: 9-25-01		
	Clifford Swanson CITY ENGINEER Date: 12/10/01	RETAINING WALL TYPE II	CVCS 32
	Brad Remp BUILDING OFFICIAL Date: 12/10/01		