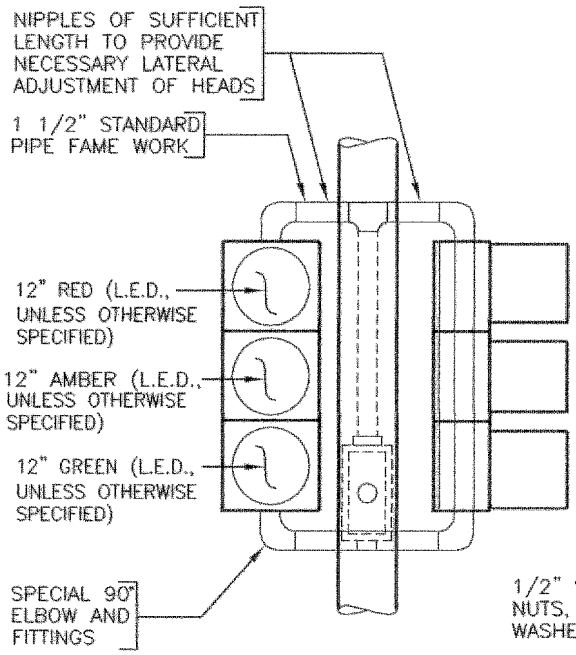

ELEVATION–TYPICAL

NO SCALE

FRONT VIEW

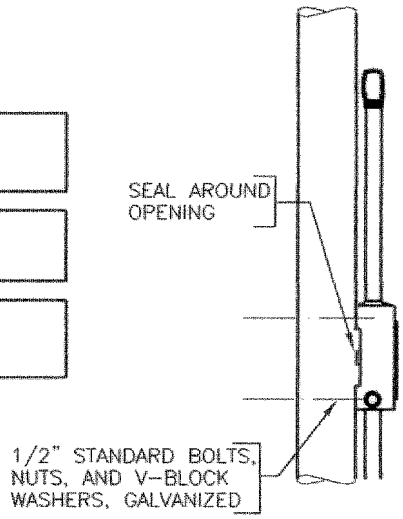

BRACKET MOUNTING

NO SCALE

SIDE VIEW

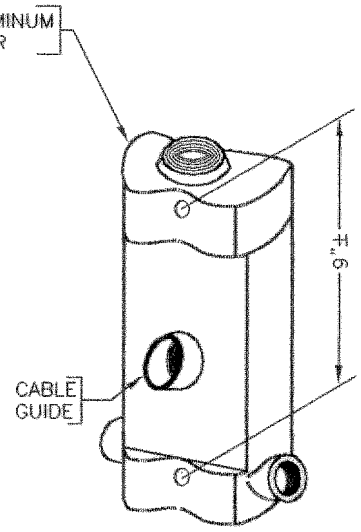

NOTES:

BRACKET MOUNTINGS SHALL BE ON SIDE OF POLE AWAY FROM TRAFFIC

TERMINAL BOX

NO SCALE

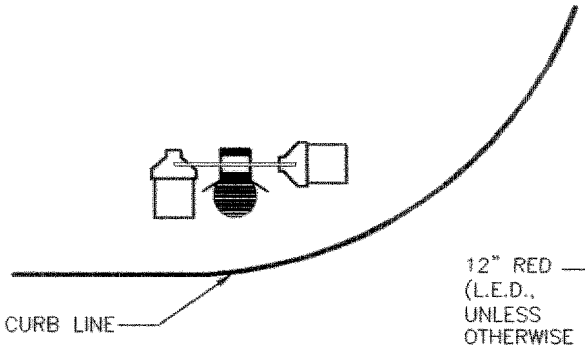

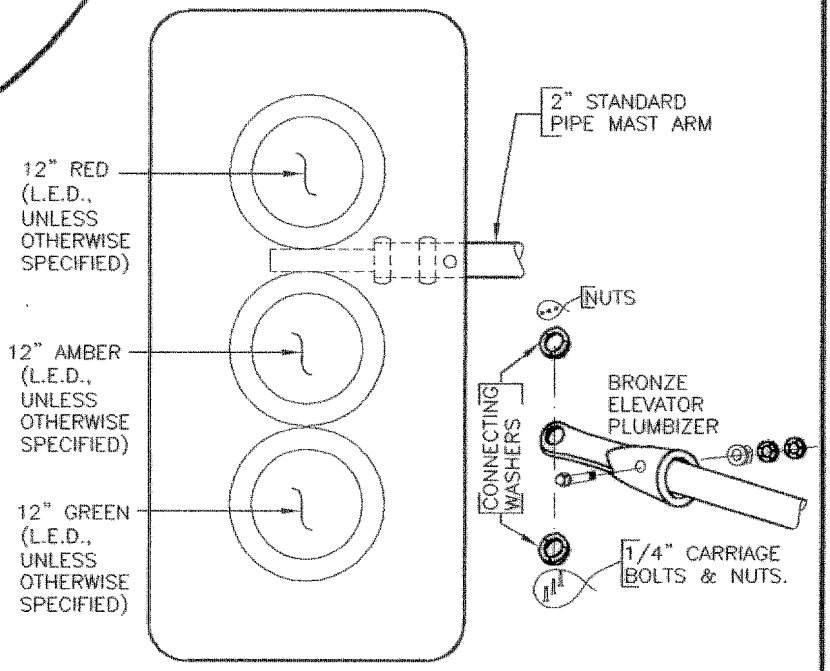

NOTES:

PLUMB AND SECURE SIGNAL HEAD, THEN DRILL 7/16" HOLE THRU MAST ARM IN LINE WITH HOLE IN SLIPFITTER. PLACE 3/8" GALVANIZED BOLT WITH WASHER UNDER HEAD THRU HOLE & SECURE WITH WASHER AND TWO NUTS.

ELEVATOR PLUMBIZER ASSEMBLY

NO SCALE

Revised:	Original approval date: 12-20-67	CITY OF CHULA VISTA PUBLIC WORKS DEPARTMENT
10-15-02 CVM	Redrawn By: ARR Date: 7-26-95	
	Clifford Swanson	SIGNAL HEAD MOUNTING BRACKET & MAST ARM INSTALLATIONS
	CITY ENGINEER Date: 11-7-02	CVCS 8