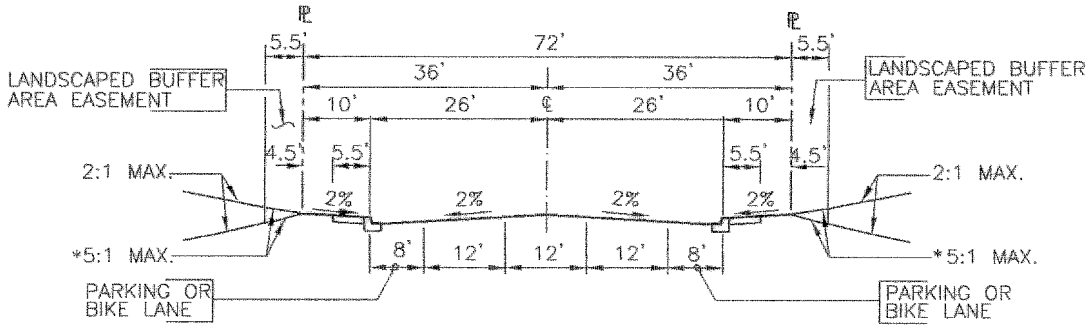

CLASS II COLLECTOR

NO SCALE

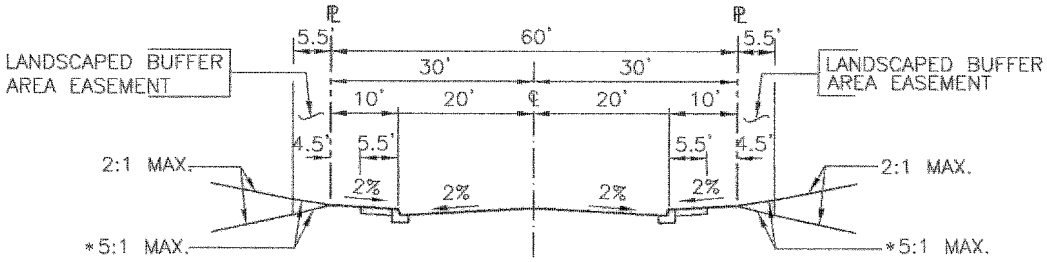

CLASS III COLLECTOR

NO SCALE

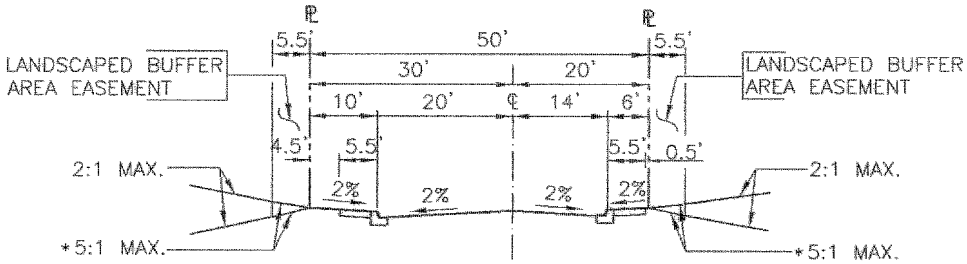

SINGLE LOADED RESIDENTIAL

NO SCALE

* LANDSCAPED SLOPES GREATER THAN 5:1 MAY BE ACCEPTABLE AS DETERMINED BY THE DIRECTOR OF PLANNING.

NOTES:

1. REFER TO CITY OF CHULA VISTA "STREET DESIGN STANDARDS POLICY" ADOPTED BY COUNCIL RESOLUTION #15349 ON OCTOBER 17, 1989.
2. STANDARDS MAY VARY IN DEVELOPED AREAS WEST OF I-805. REFER TO "STREET DESIGN STANDARDS POLICY".

Revised:	Original approval date: 2-13-90	CITY OF CHULA VISTA	
10-15-02 CVM	Redrawn By: ARR Date: 7-26-95	PUBLIC WORKS DEPARTMENT	
		2-LANE COLLECTOR AND RESIDENTIAL STREET SECTIONS	CVD-ST03
	CITY ENGINEER Date: 11-7-02		