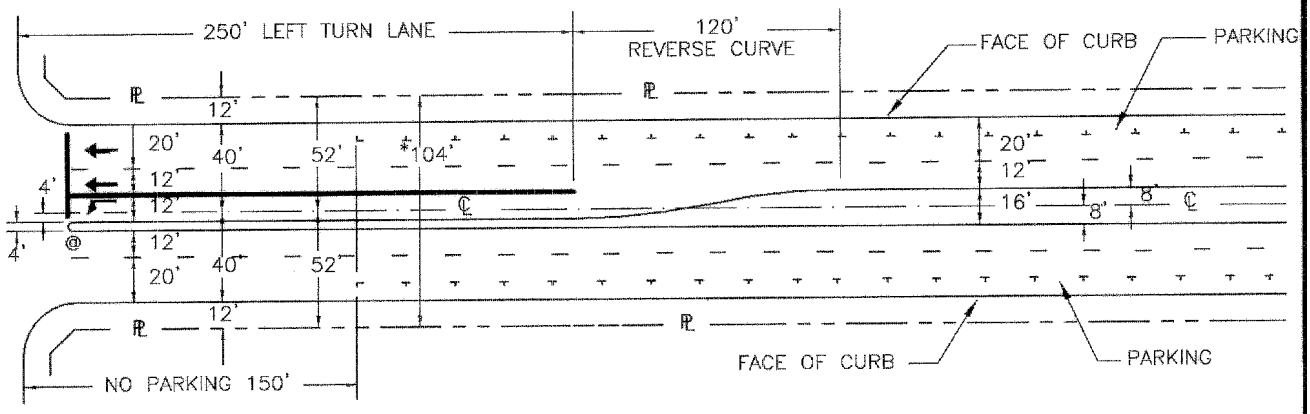

NOTES: * IF THIS IS A DESIGNATED BIKE LANE ON THE GENERAL PLAN AN ADDITIONAL 10' OF RIGHT-OF-WAY WILL BE REQUIRED.

@ MEDIAN NOSE AT PCR STATION.

4-LANE MAJOR

NO SCALE (WITH SINGLE LEFT TURN LANE)

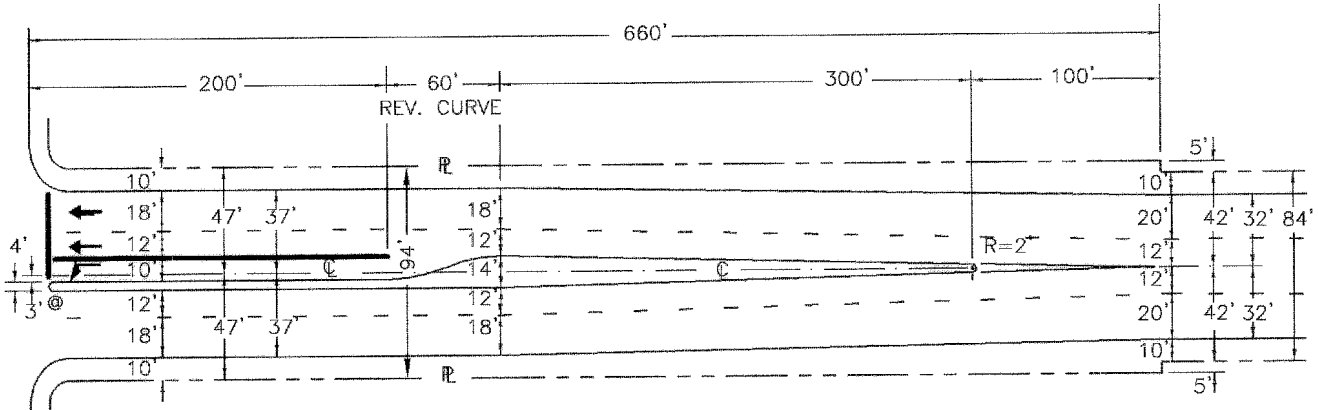

NOTES: WIDEN STREET INTERSECTION AS SHOWN WHEN INTERSECTING A CLASS I COLLECTOR STREET OR HIGHER.

@ MEDIAN NOSE AT PCR STATION.

CLASS I COLLECTOR STREET

NO SCALE (ONLY IN DEVELOPED AREAS WEST OF I-805)

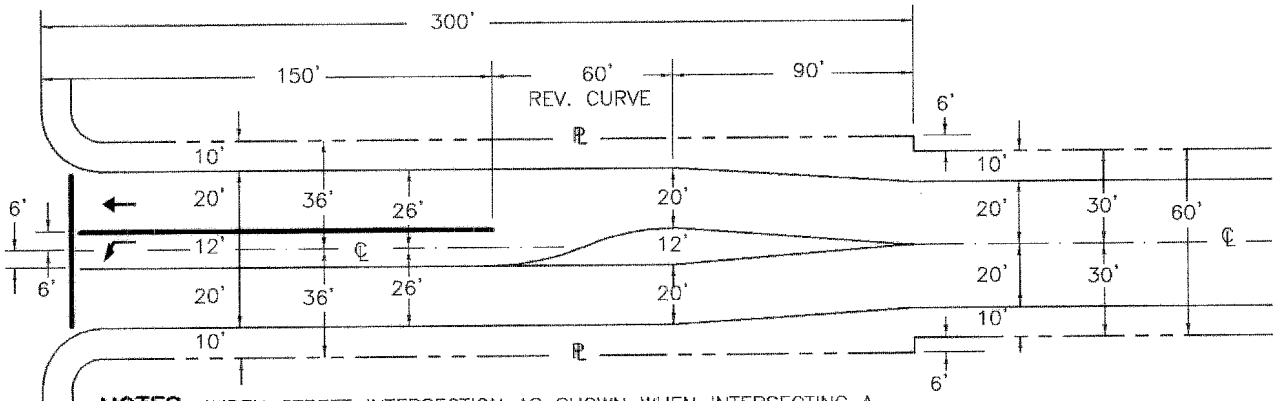

NOTES: WIDEN STREET INTERSECTION AS SHOWN WHEN INTERSECTING A CLASS II COLLECTOR STREET OR HIGHER.

CLASS II COLLECTOR STREET

NO SCALE (ONLY IN DEVELOPED AREAS WEST OF I-805)

Revised:	Original approval date: 2-13-90	CITY OF CHULA VISTA	
11-5-01 CM	Redrawn By: ARR Date: 7-26-95	PUBLIC WORKS DEPARTMENT	
	Cliff Duncan	4-LANE MAJOR & COLLECTOR INTERSECTION STANDARDS	CVD-ST16
	CITY ENGINEER Date: 11-7-02		