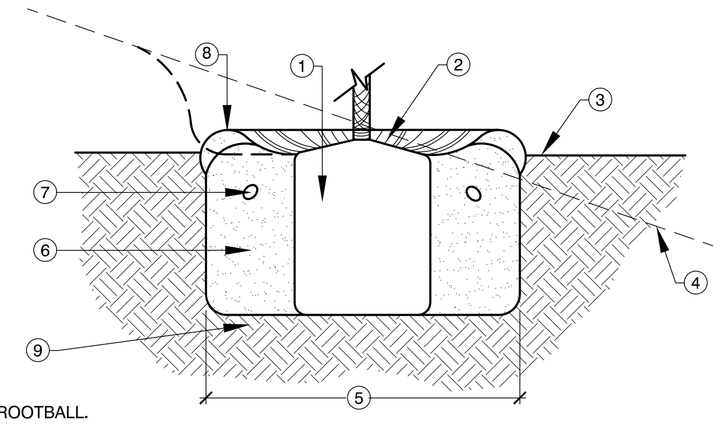

1. ROOTBALL.
2. CROWN - 1/2" ABOVE FINISH GRADE.
3. FINISH GRADE.
4. FINISHED GRADE AT SLOPE.
5. 2X ROOTBALL DIAMETER.
6. BACKFILL MIX (SEE SPECS.).
7. PLANT TABLETS (SEE SPECS).
8. 4" HIGH WATERING BASIN (IF REQ'D).
9. UNDISTURBED NATIVE SOIL.

A TREE / SHRUB PLANTING

NOT TO SCALE

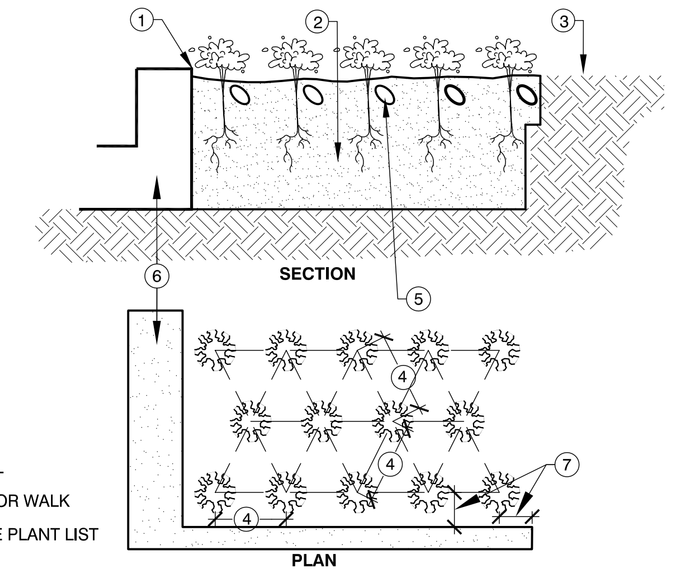

1. 2 INCHES
2. PREPARED SOIL
3. FINISH GRADE OR WALK
4. EQUAL (X) - SEE PLANT LIST
5. PLANT TABLET
6. CONCRETE CURB OR HARDSCAPE IMPROVEMENT. AS INDICATED ON PLAN.
7. EQUAL 1/2 (X)

B GROUNDCOVER PLANTING

NOT TO SCALE

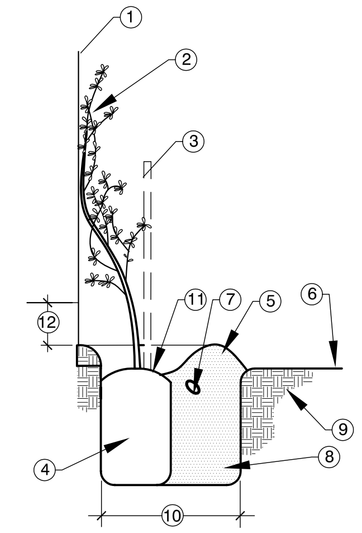

1. WALL , FENCE OR TRELLIS SURFACE.
2. VINE ATTACHED TO SURFACE WITH CLEAR PLASTIC TIES.
3. NURSERY STAKE / ESPALLIER (TO BE REMOVED)
4. SET ROOT BALL TIGHT TO FOOTING. REMOVE ANY EXCESS CONCRETE IF NECCESARY.
5. 4" HIGH WATERING BASIN.
6. FINISH GRADE.
7. PLANTING TABLET - SEE PLANTING SPECIFICATIONS.
8. BACK FILL MIX - SEE PLANTING SPECIFICATIONS.
9. UNDISTURBED NATIVE SOIL.
10. PIT DIAMETER - 2 X DIAMETER OF ROOT BALL.
11. CROWN - 1/2" ABOVE FINISH GRADE.
12. MIN. 4" BELOW FINISH FLOOR OF BUILDING.

C VINE PLANTING

NOT TO SCALE

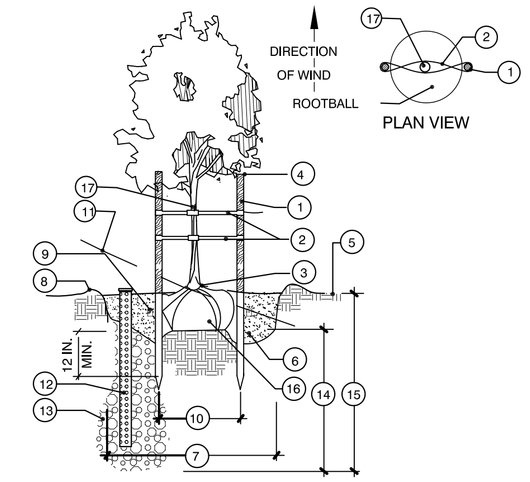

NOTE: PROVIDE DOUBLE STAKE TO ALL TREES. CUT STAKE 6" BELOW TREE CANOPY.

NOTE: TREES IN TURF AREAS TO RECEIVE TREE TRUNK PROTECTOR AT BASE. SHALL BE "ARBORGARD" BY DEEP ROOT.

1. (2) 2 IN. DIA. X 10 FT. LONG LODGEPOLE PINE STAKES, SET PERPENDICULAR TO PREVAILING WINDS.
2. VINYL TREE TIE (2 req'd per stake), OR EQUAL. INSTALL AT POINT 6" ABOVE WHERE TREE TRUNK WILL BE HELD UPRIGHT AND NOT BEND OVER. INSTALL PER MANUFACTURE'S SPECIFICATIONS.
3. SET CROWN 2 IN. ABOVE FINISH GRADE.
4. CUT TOP SECTION OFF OF STAKE 6" BELOW TREE CANOPY.
5. FINISH GRADE.
6. BACKFILL(SEE SPEC.) PUDDLE AND SETTLE. SET TREE 2 IN. ABOVE FIN. GR.
7. 2 X ROOTBALL DIAMETER.
8. 3 IN. WATERING BASIN, EXCEPT IN LAWN AREAS. REMOVE AFTER MAINT. PERIOD.
9. PLANT TABLETS, INSTALL PER MANUFACTURER'S SPECIFICATIONS.
10. PLACE STAKES OUTSIDE OF ROOTBALL.
11. FIN. GRADE AT EXISTING SLOPE (AS REQ'D).
12. 4" PERFORATED PIPE W/BLACK ROUND GRATE CAP - 4' MIN TO 6' MAX. LENGTH WRAPPED WITH FILTER FABRIC
    - 1 PER 15 GALLON TREE
    - 2 PER 24" AND 36" BOX TREE
13. 3/4" GRAVEL DRAINAGE SUMP WITH FILTER FABRIC EDGE
14. 6'-0" MAXIMUM
15. 10'-0" MAXIMUM
16. TREE PIT-FILL AND SETTLE WITH WATER A MIN. OF 24 HOURS PRIOR TO PLANTING.
17. TREE TRUNK

D TREE DOUBLE STAKING AND DRAINAGE

NOT TO SCALE

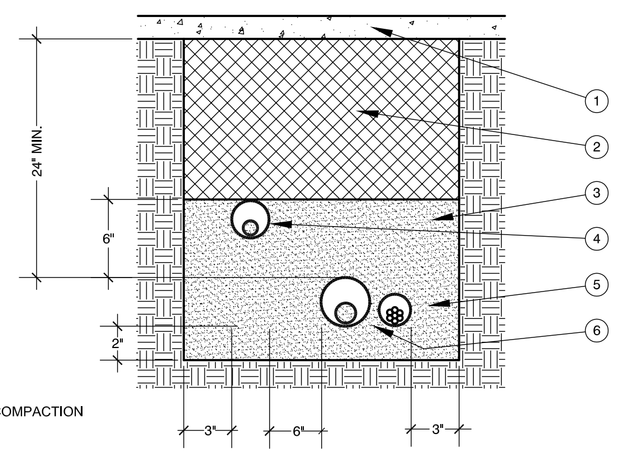

1. HARDSCAPE (TYPICAL)
2. CLEAN BACKFILL - 90% COMPACTION REQUIRED - SEE SPECS
3. SAND (TYPICAL)
4. NON-PRESSURE LATERAL LINE IN SLEEVE 18" MINIMUM DEPTH
5. CONTROL WIRE SLEEVE ADJACENT TO MAINLINE SLEEVE
6. PRESSURE SUPPLY LINE IN SLEEVE 24" MINIMUM DEPTH

NOTE:
ALL PRESSURE MAINLINE UNDER DRIVES SHALL BE BURIED TO A 30" MINIMUM DEPTH.

NOTES:
1. All sleeves to be Sch.40 PVC (Sch.80 under roadways).
2. All sleeves shall be 2x the size of the pipe being carried. Min. sleeve size shall be 2".
3. Extend sleeves 12" beyond edge of hardscape on both ends.
4. During installation tape closed ends of pipes until all laterals and wires have been run.

E SLEEVING

NOT TO SCALE

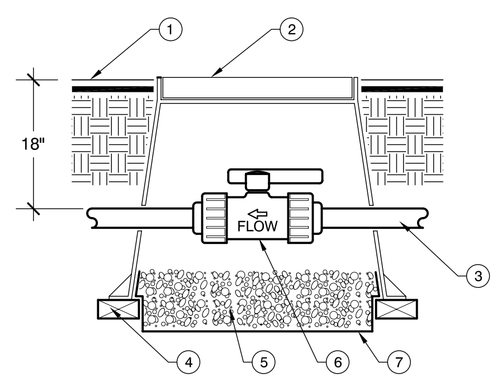

1. FINISHED GRADE
2. PLASTIC VALVE BOX (10", AMETEK OR EQUAL)
3. MAINLINE
4. BRICK SUPPORTS
5. 1/2 C.F. 3/4" CRUSHED GRAVEL
6. BALL VALVE
7. LANDSCAPE FABRIC

F BALL VALVE

NOT TO SCALE

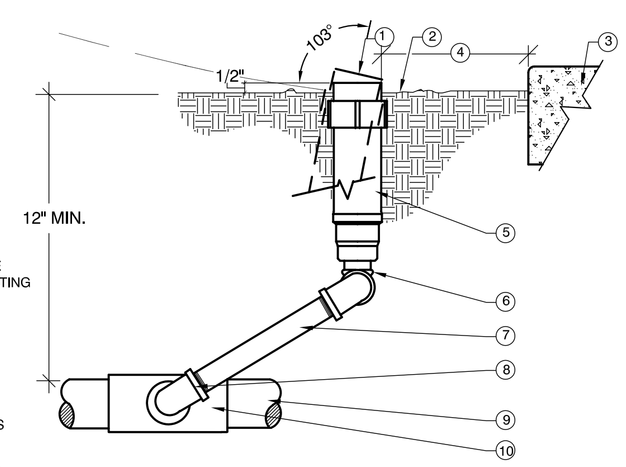

1. INSTALL SPRINKLER ANGLE FOR MAX. THROW IF IRRIGATING SLOPES
2. FINISH GRADE OF SOIL OR MULCH WHERE OCCURS
3. PAVING OR STRUCTURE
4. SPRAY HEADS: 4" FROM WALKS AND CURBS 8" FROM STRUCTURES
5. POP-UP SPRINKLER / ROTOR W/ BUILT-IN CHECK VALVE
6. 1/2" MARLEX STREET ELL (MIPT X FIPT)(2)
7. 1/2" SCH. 80 PVC THREADED 6" NIPPLE
8. 1/2" MARLEX STREET ELL (MIPT x FIPT)
9. PVC LATERAL LINE
10. SCH. 40 PVC S X S X FIPT TEE OR ELL

NOTE:
1. Contractor shall install additional anti-drain valves, as required, to prevent low head drainage
2. Use bottom inlet only
3. Use pop-ups on all heads within 5' of walks, lawn, or curbs.

G POP-UP SRAY HEAD

NOT TO SCALE

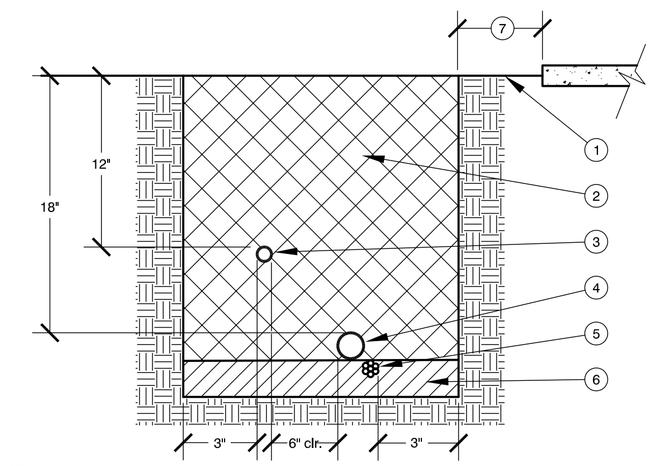

1. FINISH GRADE
2. CLEAN BACKFILL - 90% COMPACTION REQUIRED - SEE SPECS
3. NON-PRESSURE LATERAL LINE PER LEGEND
4. PRESSURE SUPPLY LINE PER LEGEND
5. DIRECT BURIAL, LOW VOLTAGE CONTROL WIRES - INSTALL BELOW PRESSURE SUPPLY LINE. BUNDLE AND TAPE WIRES AT 12' O.C. LOOP CONTROL WIRES AT ALL 90 DEGREE CHANGES IN DIRECTION. SPLICING OF WIRE RUNS IS NOT ALLOWED UNLESS APPROVED BY THE OWNER
6. PROVIDE 2" OF CLEAN SAND BELOW PRESSURE MAINLINE IF ROCK LARGER THAN 2" IS PRESENT
7. 6" MIN. CLEARANCE FROM HARDSCAPE (MAINLINE ONLY)

MAINLINE SPECIFICATIONS:
CL. 315 FOR 2" OR MORE SCH. 40 FOR 1-1/2" OR LESS.

NOTE:
ALL PRESSURE MAINLINE UNDER DRIVES SHALL BE BURIED TO A 30" MINIMUM DEPTH.

NOTES:
1. Pipe shall be snaked side to side in trench to allow expansion.

H TRENCHING

NOT TO SCALE

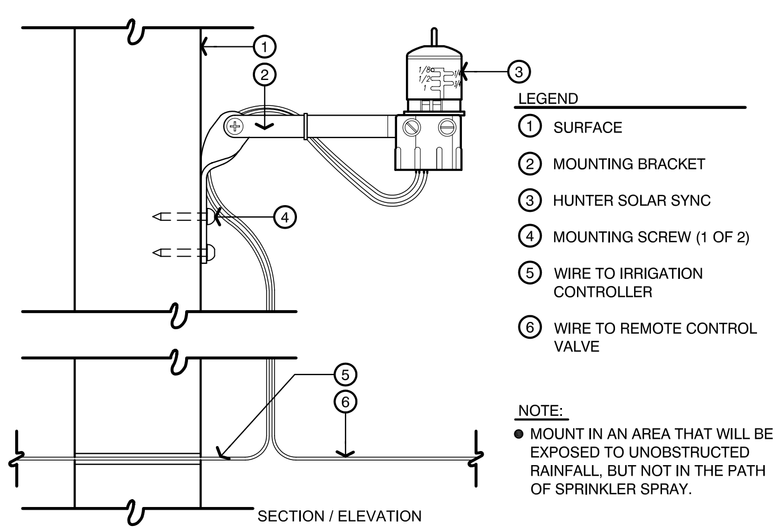

LEGEND
1. SURFACE
2. MOUNTING BRACKET
3. HUNTER SOLAR SYNC
4. MOUNTING SCREW (1 OF 2)
5. WIRE TO IRRIGATION CONTROLLER
6. WIRE TO REMOTE CONTROL VALVE

SECTION / ELEVATION

NOTE:
- MOUNT IN AN AREA THAT WILL BE EXPOSED TO UNOBSTRUCTED RAINFALL, BUT NOT IN THE PATH OF SPRINKLER SPRAY.

I SOLAR SYNC MOUNTING DETAIL

NOT TO SCALE

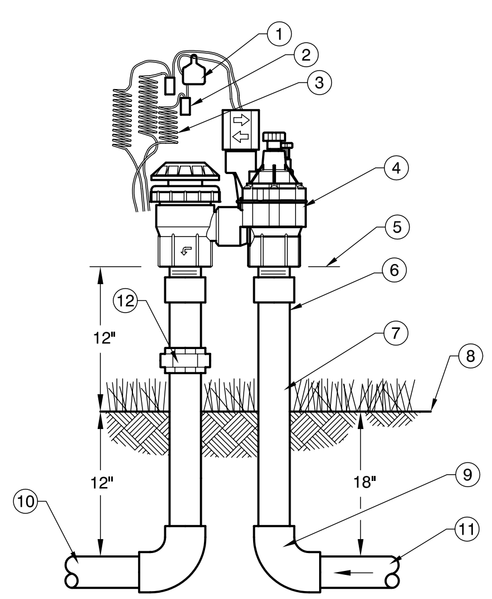

1. ID TAG.
2. WATER PROOFCONNECTION (1 OF 2).
3. 30-INCH LINEAR LENGTH OF WIRE,COILED
4. REMOTE CONTROL VALVE:RAIN BIRD ASVF
5. INSTALL 12-INCH MIN. ABOVE HIGHEST POINT OF DISCHARGE.
6. UV RADIATION RESISTANT PVC SCH 40 MALE ADAPTER (1 OF 2).
7. UV RADIATION RESISTANT PVC SCH 40 PIPE (1 OF 2)
8. FINISH GRADE/TOP OF MULCH
9. PVC SCH 40 ELL (1 OF 2)
10. PVC LATERAL PIPE (1 OF 2)
11. PVC MAIN LINE PRESSURIZED.
12. SCH. 80 PVC UNION.

J ANTI-SIPHON CONTROL VALVE

NOT TO SCALE

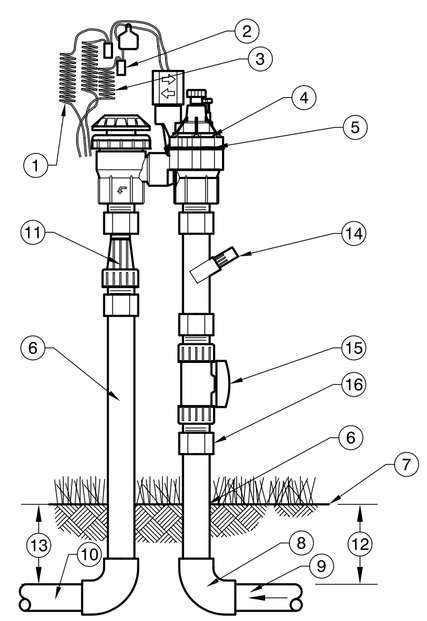

1. ID TAG.
2. WATER PROOFCONNECTION (1 OF 2).
3. 30-INCH LINEAR LENGTH OF WIRE,COILED
4. REMOTE CONTROL VALVE:RAIN BIRD ASVF
5. INSTALL 18-INCH MIN. ABOVE HIGHEST POINT OFDISCHARGE.
6. UV RADIATION RESISTANT PVC SCH 40 PIPE (1 OF 2)
7. FINISH GRADE/TOP OF MULCH
8. PVC SCH 40 ELL (1 OF 2)
9. PVC LATERAL PIPE (1 OF 2)
10. PVC MAIN LINE PRESSURIZED.
11. PRESSURE REGULATOR.
12. 18" MIN. MAINLINE DEPTH.
13. 12" MIN. LATERAL DEPTH.
14. FILTER.
15. BALL VALVE.
16. PVC UNION FOR SERVICING ASSEMBLY.

K CONTROL ZONE KIT

NOT TO SCALE

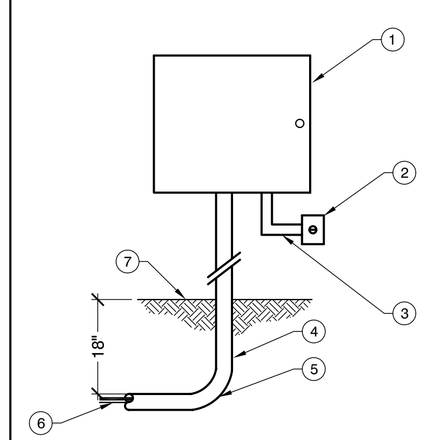

1. CONTROLLER, INTERIOR WALL MOUNT FASTEN TO WALL PER MANUFACTURERS RECOMMENDATIONS. SEE LEGEND FOR SPECIFICATIONS
2. 120 VOLT POWER SUPPLY IN J-BOX, BY OTHERS
3. ELECTRICAL CONDUIT (1")
4. LOW VOLTAGE WIRE IN GREY PVC CONDUIT (1" DIA.) WIRE TO BE SLEEVED IN CONDUIT TO 18" BELOW GRADE
5. SWEEP ELL
6. LOW VOLTAGE WIRE TO REMOTE CONTROL VALVES
7. FINISHED GRADE

NOTES:
ALL WALL PENETRATIONS SHALL BE CLEAN AND SHALL BE RESEALED WATER TIGHT.

L WALL MOUNT CONTROLLER

NOT TO SCALE

REVISIONS	BY

TESHIMA DESIGN GROUP
LANDSCAPE ARCHITECTURE · LAND PLANNING
9903 BUSINESSPARK AVE. SUITE 100 · SAN DIEGO, CA 92131
PH: (858) 693-8824 FAX: (858) 693-1182

PLANTING AND IRRIGATION DETAILS

DESIGN FOR EMPTY NESTER/ENTERTAINER
TYPICAL RESIDENTIAL PLOT

Date:	4-30-10
Scale:	AS SHOWN
Drawn:	MS
Job:	COOP. COMM.
Sheet	L-5
	of 5 Sheets