DRAINAGE

(DRN)

CITY OF CHULA VISTA

DESIGN AND CONSTRUCTION STANDARD DRAWINGS 2017

DEPARTMENT OF ENGINEERING AND CAPITAL PROJECTS

REVISION	BY	APPROVED	DATE
ORIGINAL	CVM		01/02
REVISION	CVM	C. SWANSON	11/02
REVISION	DPH	W. VALLE	11/17

CITY OF CHULA VISTA
ENGINEERING & CAPITAL PROJECTS
STANDARD DRAWING

2-YEAR, 6-HOUR PRECIPITATION

WILLIAM S. VALLE 11/21/2017
CITY ENGINEER

DRN-01

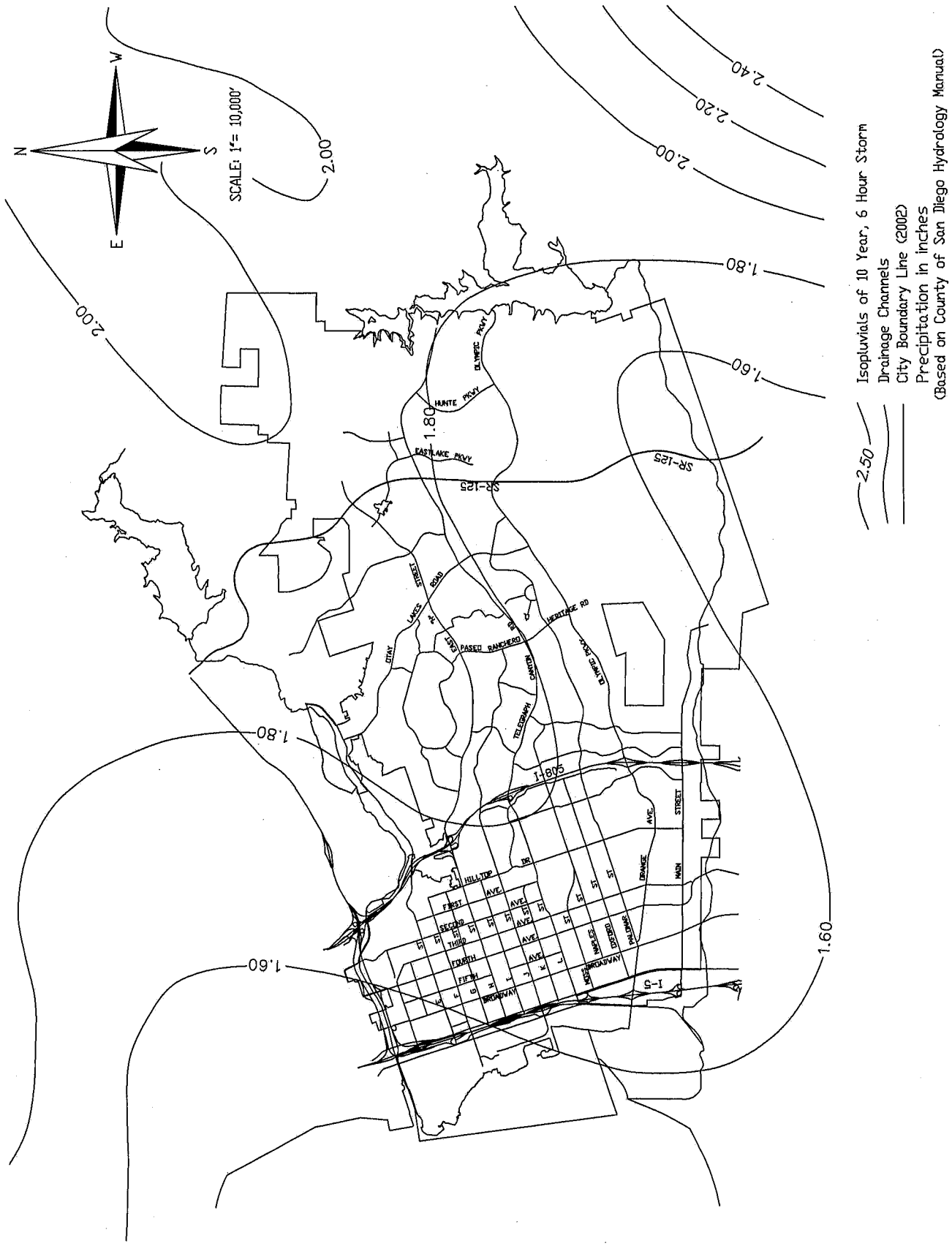

REVISION	BY	APPROVED	DATE
ORIGINAL	CVM		01/02
REVISION	CVM	C. SWANSON	11/02
REVISION	DPH	W. VALLE	11/17

CITY OF CHULA VISTA
ENGINEERING & CAPITAL PROJECTS
STANDARD DRAWING

10-YEAR, 6-HOUR PRECIPITATION

WILLIAM S. VALLE 11/21/2017
CITY ENGINEER

DRN-02

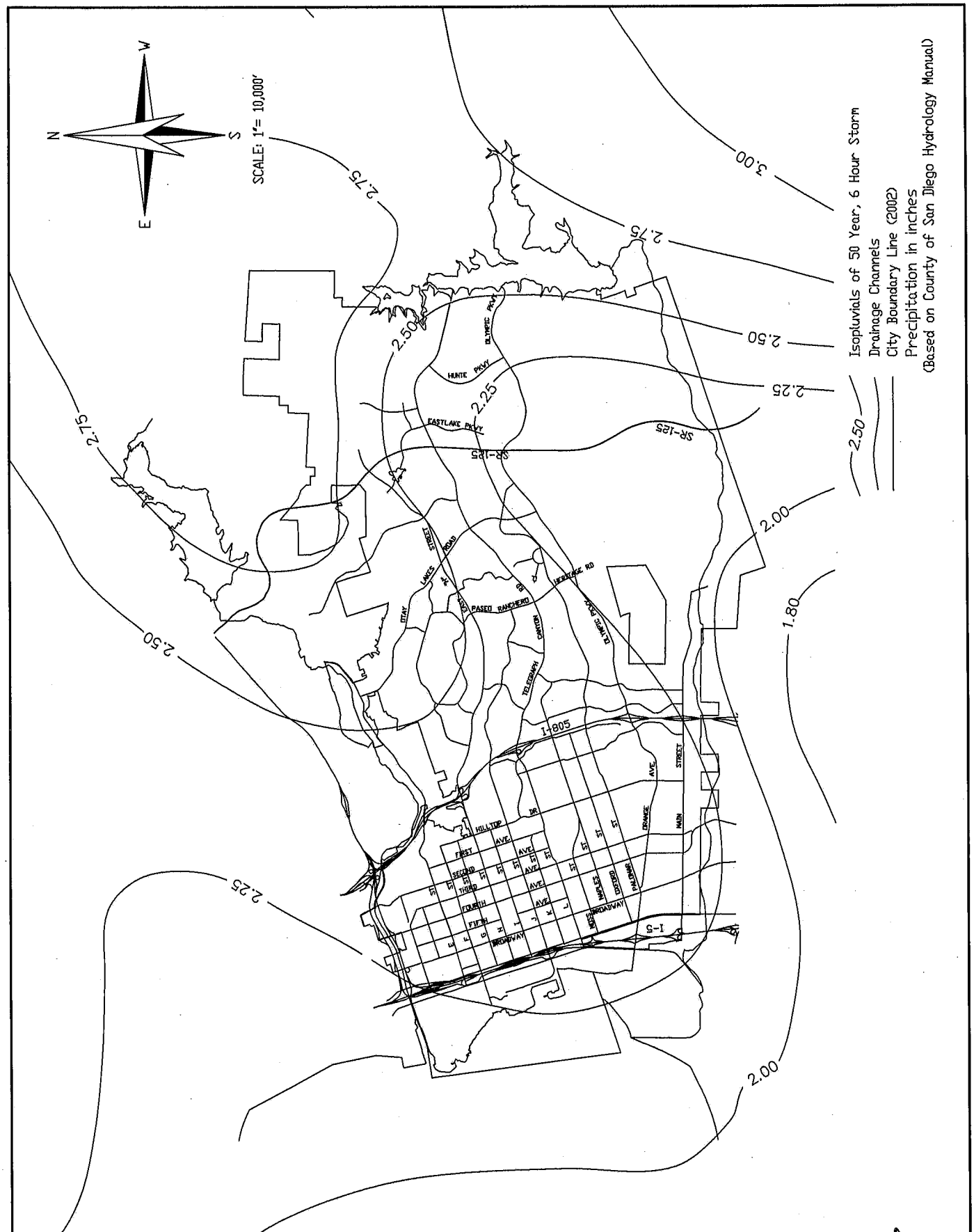

REVISION	BY	APPROVED	DATE
ORIGINAL			01/02
REVISION	CVM	C. SWANSON	11/02
REVISION	DPH	W. VALLE	11/17

CITY OF CHULA VISTA
ENGINEERING & CAPITAL PROJECTS
STANDARD DRAWING

50-YEAR, 6-HOUR PRECIPITATION

WILLIAM S. VALLE 11/21/2017
CITY ENGINEER

DRN-03

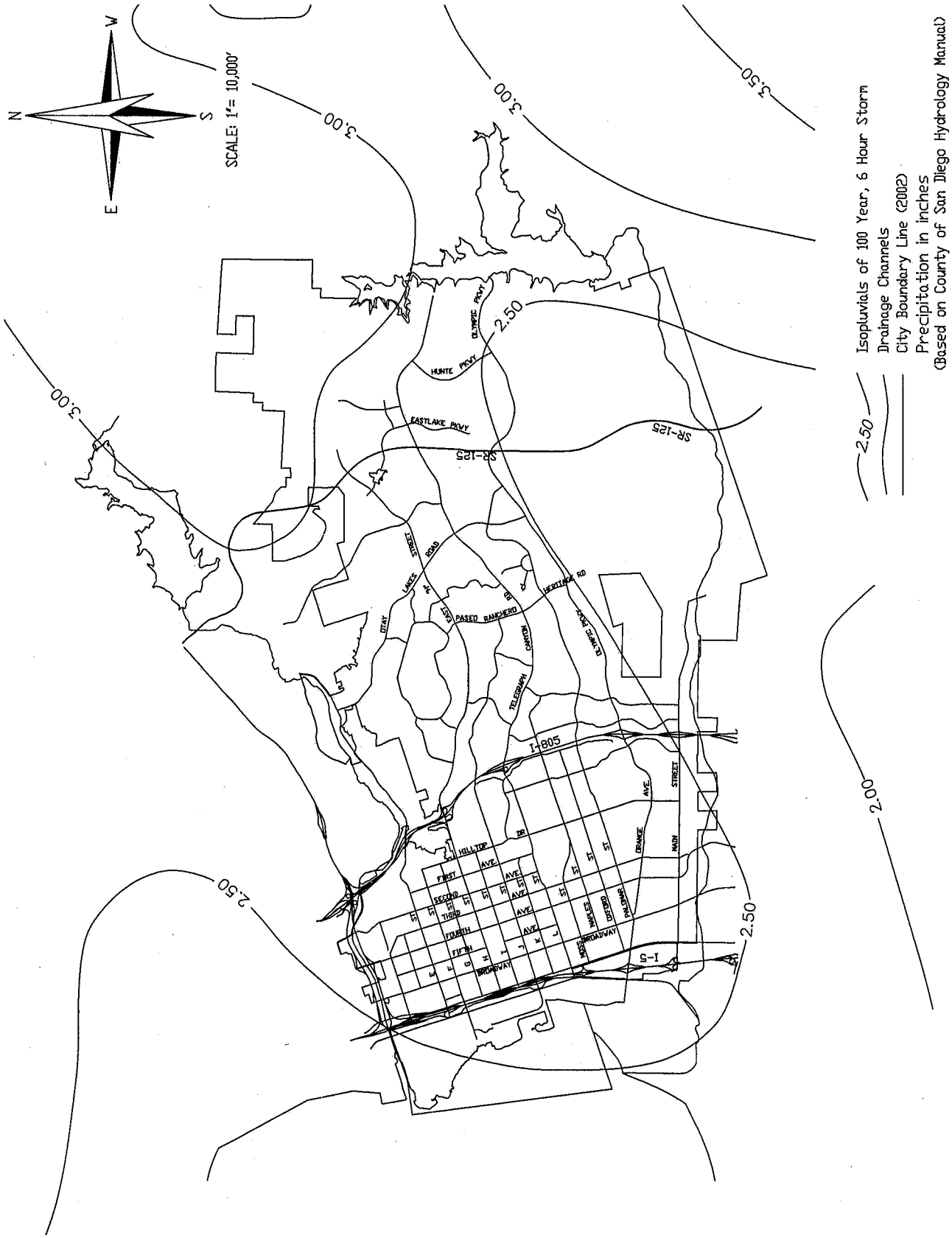

REVISION	BY	APPROVED	DATE
ORIGINAL			01/02
REVISION	CVM	C. SWANSON	11/02
REVISION	DPH	W. VALLE	11/17

CITY OF CHULA VISTA
ENGINEERING & CAPITAL PROJECTS
STANDARD DRAWING

100-YEAR, 6-HOUR PRECIPITATION

WILLIAM S. VALLE 11/21/2017
CITY ENGINEER

DRN-04

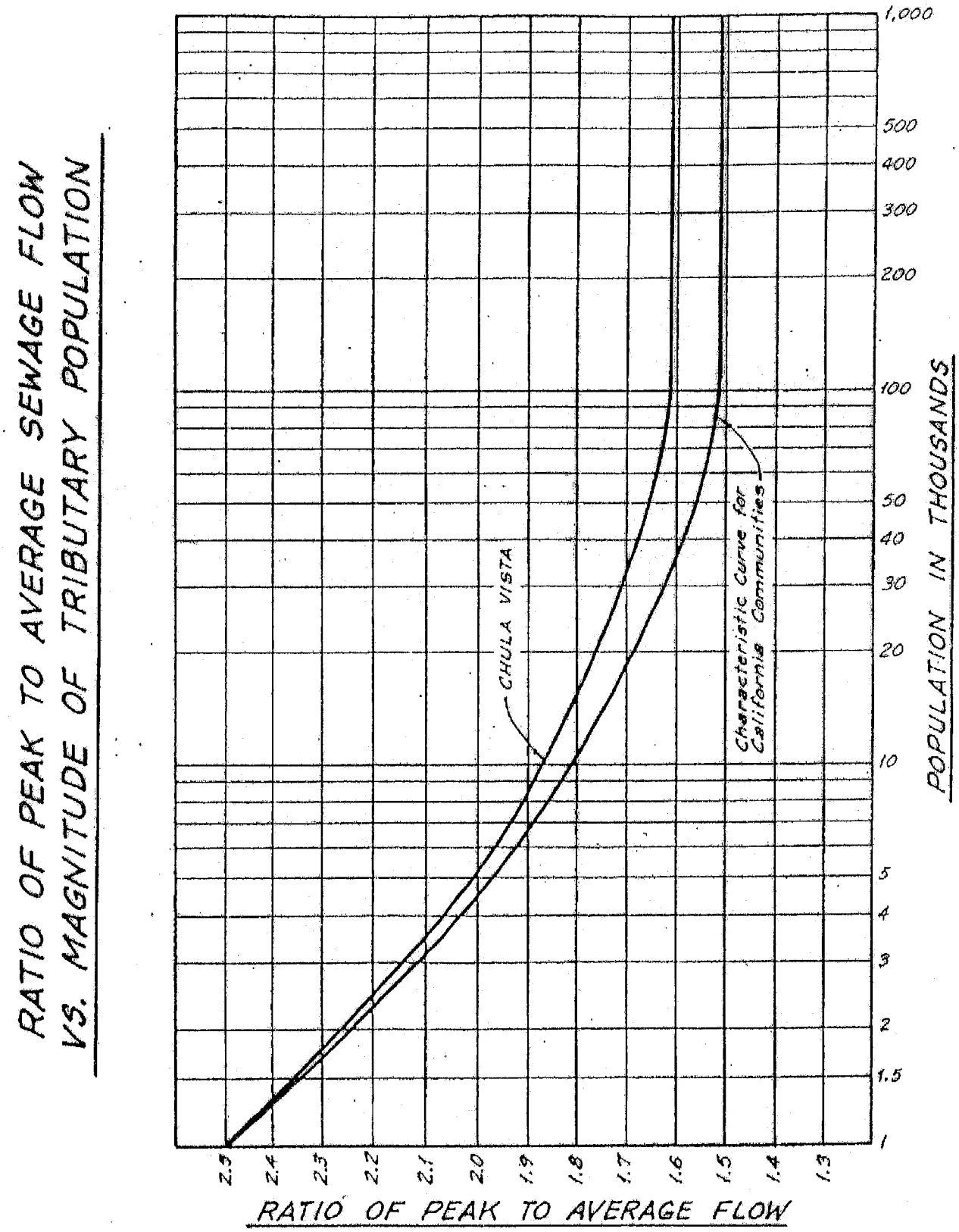

REVISION	BY	APPROVED	DATE
ORIGINAL	JWH		10/72
		C. SWANSON	11/02
REVISION	DPH	W. VALLE	11/17

CITY OF CHULA VISTA
ENGINEERING & CAPITAL PROJECTS
STANDARD DRAWING

STREET DRAINAGE 36'–WIDE STREETS

WILLIAM S. VALLE 11/21/2017
CITY ENGINEER

DRN–05

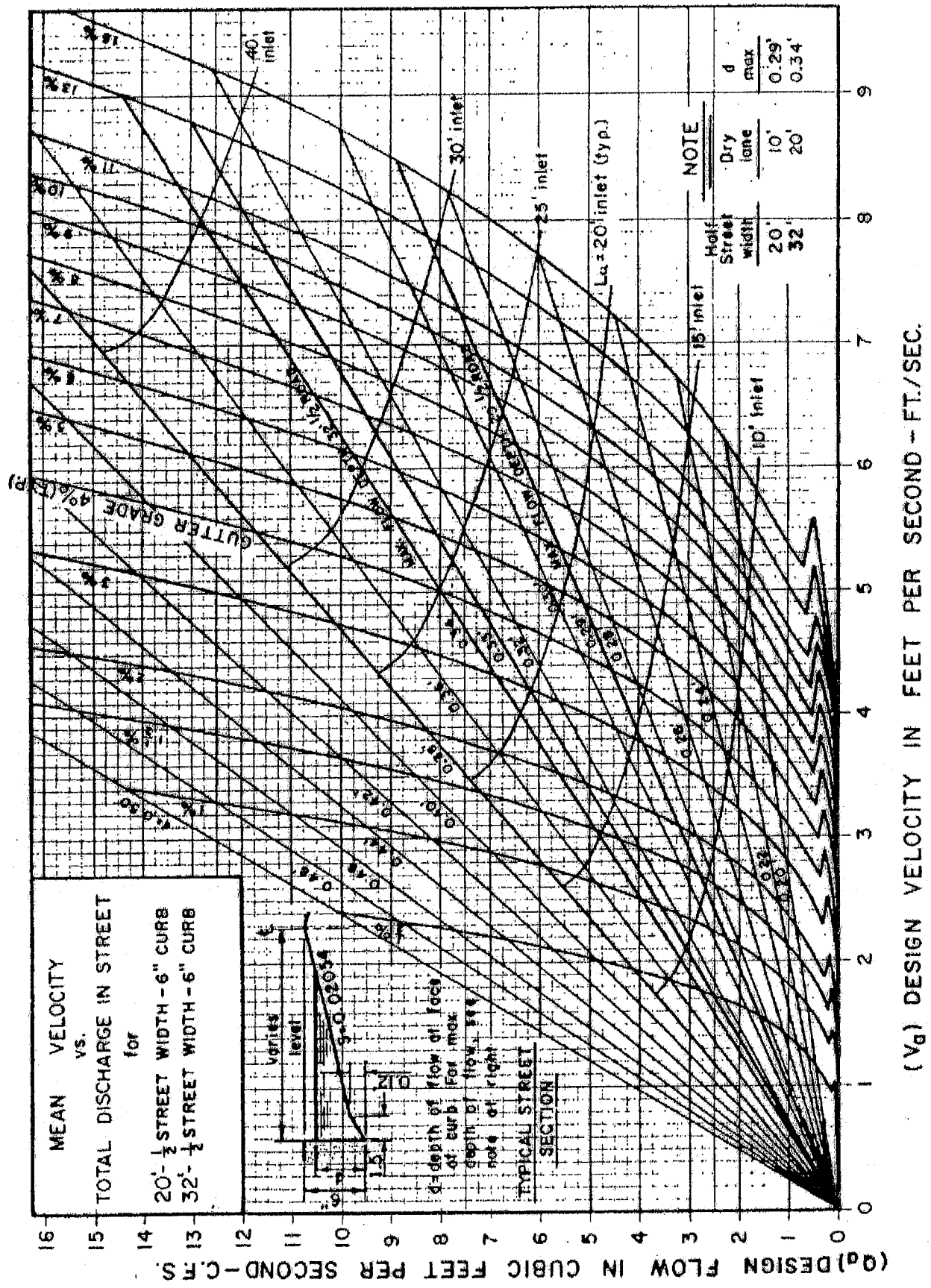

REVISION	BY	APPROVED	DATE
ORIGINAL	JWH		10/72
		C. SWANSON	11/02
REVISION	DPH	W. VALLE	11/17

CITY OF CHULA VISTA
ENGINEERING & CAPITAL PROJECTS
STANDARD DRAWING

STREET DRAINAGE – 40' & 64' WIDE STREETS

WILLIAM S. VALLE 11/21/2017
CITY ENGINEER

DRN–06

TO DETERMINE LENGTH OF INLET TO INTERCEPT 100% OF GUTTER FLOW

ITEM	UNITS	DESCRIPTION	HOW DETERMINED
Q_a	c.f.s.	AMOUNT OF FLOW IN GUTTER ON ONE SIDE OF STREET.	HYDROLOGY STUDY OF AREA.
d	ft.	DEPTH OF FLOW AT FACE OF CURB.(NOT CONSIDERING INLET DEPRESSION)	SEE CVD-DR06 OR CVD-DR07 (INTERSECTION OF Q_a LINE AND GUTTER GRADE LINE WILL FALL BETWEEN d LINES. INTERPOLATE FOR VALUES.)
L_a	ft.	LENGTH OF INLET WHICH WILL INTERCEPT 100% OF Q_a AT GIVEN GUTTER GRADE.	CVD-DR06 AND CVD-DR07 (INTERSECTION OF Q_a LINE AND GUTTER GRADE LINE WILL FALL BETWEEN d LINES. INTERPOLATE FOR VALUES.)

TO DETERMINE LENGTH OF INLET TO INTERCEPT A PORTION OF GUTTER FLOW

(THIS METHOD TRIES DIFFERENT LENGTHS OF INLETS TO DETERMINE HOW MUCH FLOW WILL BE INTERCEPTED BY EACH LENGTH INLET AND HOW MUCH FLOW WILL CONTINUE PAST INLET. FIRST DETERMINE Q_a , d AND L_a AS ABOVE.)

ITEM	UNITS	DESCRIPTION	HOW DETERMINED
L	ft.	LENGTH OF PROPOSED INLET	SELECT TRIAL LENGTH
L/L_a		RATIO OF L TO L_a	DIVIDE L BY L_a
a	ft.	AMOUNT FLOW LINE OF GUTTER IS DEPRESSED AT INLET.	STD. DWG. OF INLET BEING CONSIDERED FOR USE.
a/d		RATIO OF a TO d	DIVIDE a BY d
Q	c.f.s.	FLOW INTERCEPTED BY INLET OF LENGTH L.	CVD-DR05 (INTERSECTION OF L/L_a LINE AND a/d LINE WILL FALL BETWEEN Q/Q_a LINE. INTERPOLATE FOR VALUES $Q = Q_a \times Q/Q_a$
$Q_a - Q$	c.f.s.	FLOW CONTINUING PAST INLET.	SUBTRACT Q FROM Q_a

NOTE:
DRN-07 OR DRN-08 MAY ALSO BE USED BEGINNING WITH A SELECTED Q TO DETERMINE L.

REVISION	BY	APPROVED	DATE
ORIGINAL			08/78
REVISION	CM	C. SWANSON	11/02
REVISION	DPH	W. VALLE	11/17

CITY OF CHULA VISTA
ENGINEERING & CAPITAL PROJECTS
STANDARD DRAWING

INLET DESIGN – LENGTH OF INLET

WILLIAM S. VALLE 11/21/2017
CITY ENGINEER

DRN-07

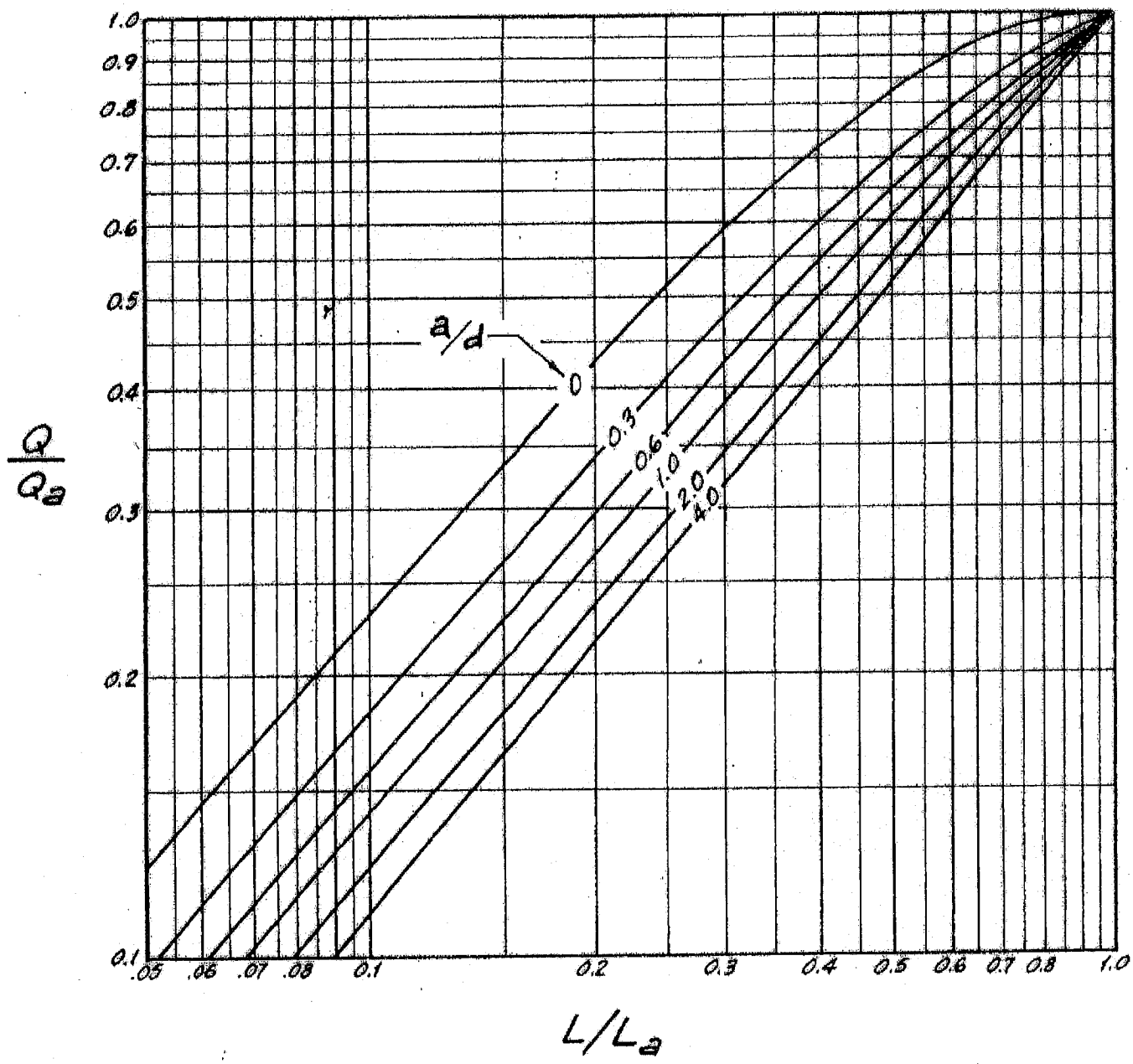

NOTE: SEE VIII FOR IDENTIFICATION OF SYMBOLS

REVISION	BY	APPROVED	DATE
ORIGINAL	JWH		11/72
		C. SWANSON	11/02
REVISION	DPH	W. VALLE	11/17

CITY OF CHULA VISTA
ENGINEERING & CAPITAL PROJECTS
STANDARD DRAWING

INLET DESIGN – PARTIAL
INTERCEPTION OF GUTTER FLOW

WILLIAM S. VALLE 11/21/2017
CITY ENGINEER

DRN–08

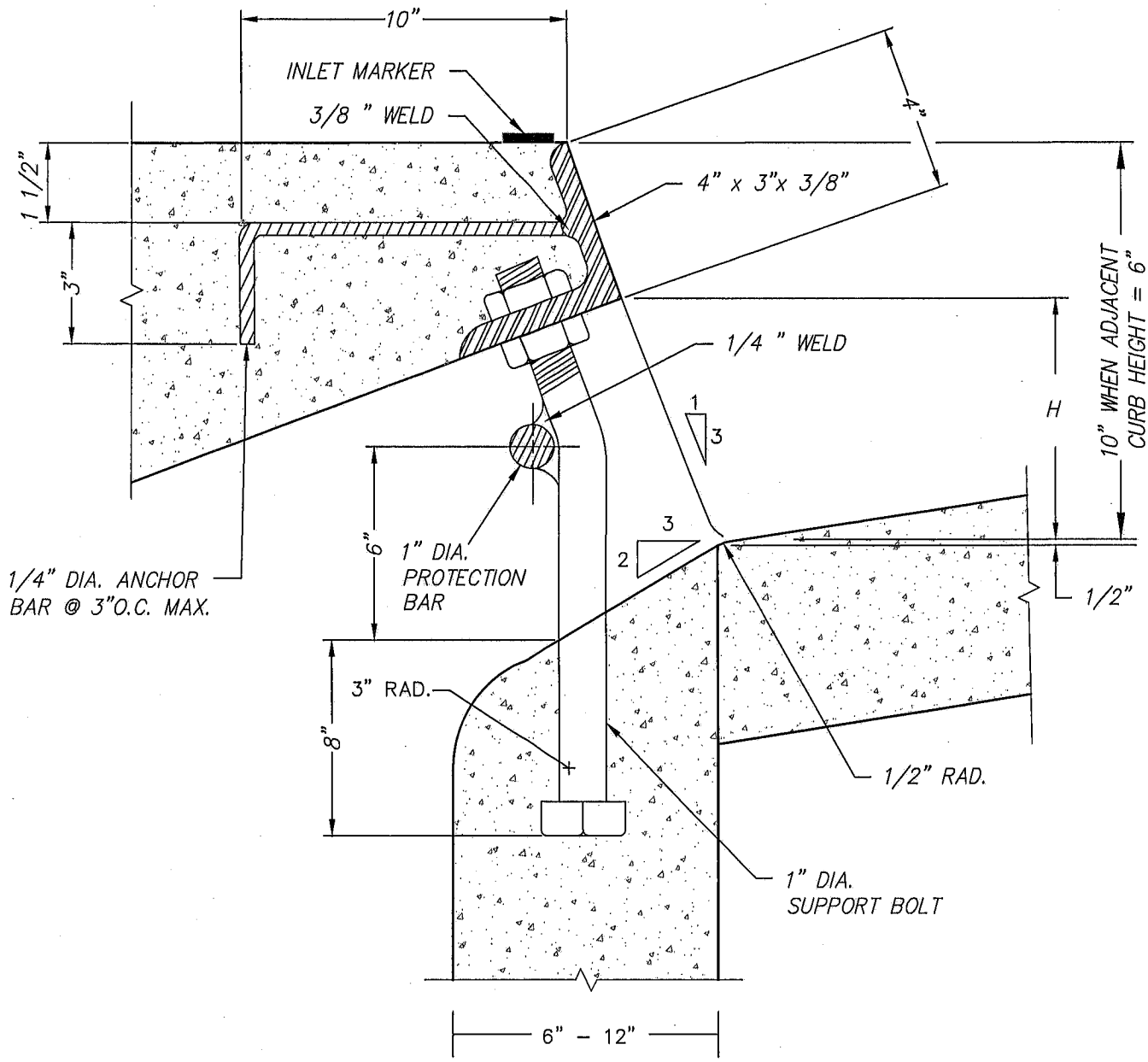

NOTES:

1. FACE ANGLE SHALL BE CAST INTO STRUCTURE CONTINUOUS FOR THE FULL LENGTH "L".
2. EXPOSED METAL PARTS SHALL BE HOT-DIPPED GALVANIZED AFTER FABRICATION.
3. WHEN CURB INLET OPENING HEIGHT (H) EXCEEDS 8", INSTALL 1" DIA. STEEL PROTECTION BAR. STEEL PROTECTION BAR SHALL BE EMBEDDED 8" INTO CURB INLET.
4. INSTALL ADDITIONAL BARS AT 3 ½" CLEAR SPACING ABOVE FIRST BAR WHEN OPENING EXCEEDS 16".
5. WHEN CURB INLET OPENING LENGTH EXCEEDS 8', INSTALL 1" DIA. STEEL SUPPORT BOLTS, SPACED AT NOT MORE THAN 5' OC.

SHEET 1 OF 2

REVISION	BY	APPROVED	DATE
ORIGINAL	DPH	W. VALLE	11/17

CITY OF CHULA VISTA
ENGINEERING & CAPITAL PROJECTS
STANDARD DRAWING

CURB INLET OPENING

WILLIAM S. VALLE 11/21/2017
CITY ENGINEER

DRN-09

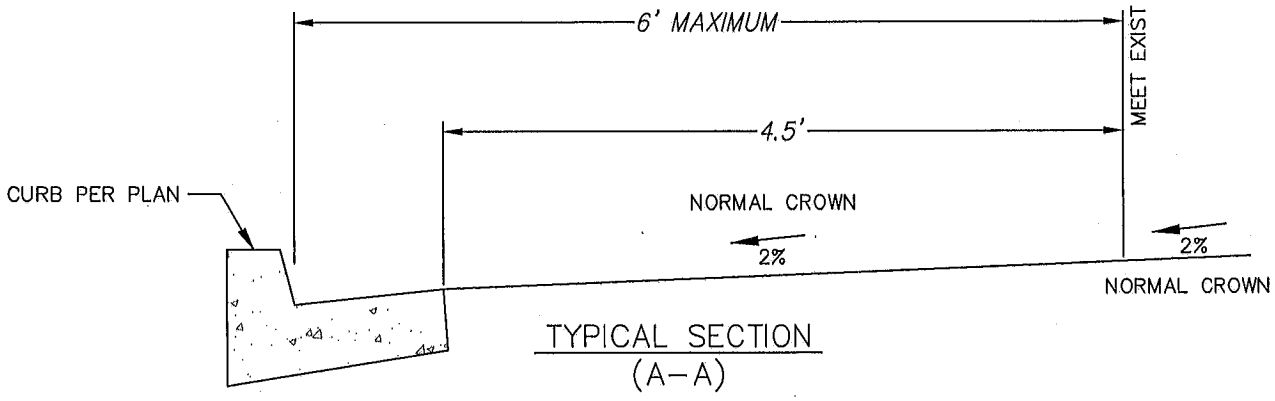

TYPICAL SECTION
(A–A)

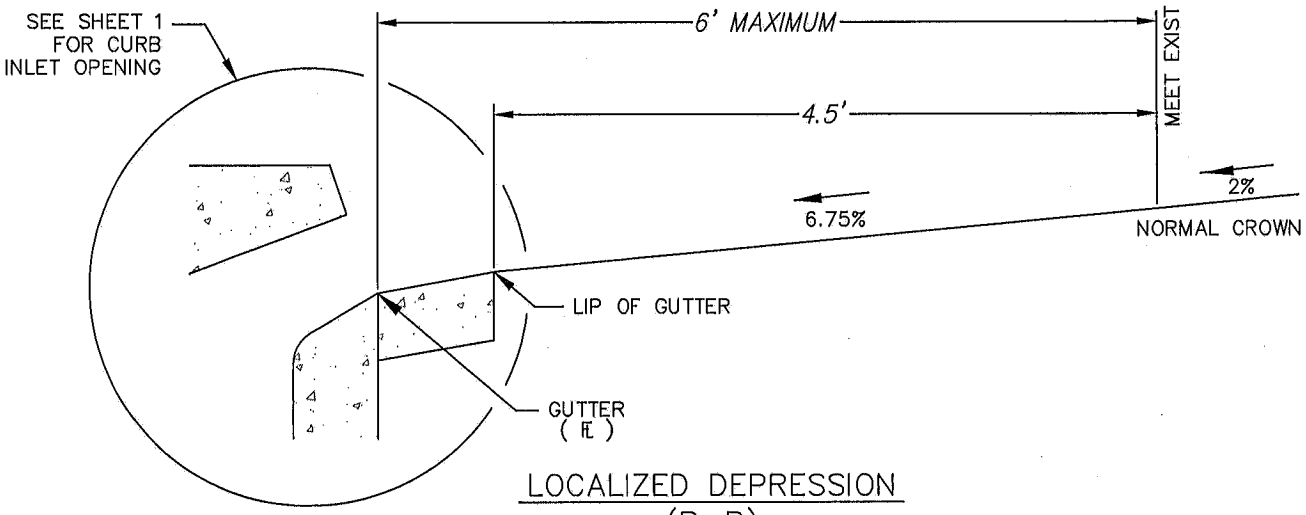

LOCALIZED DEPRESSION
(B–B)

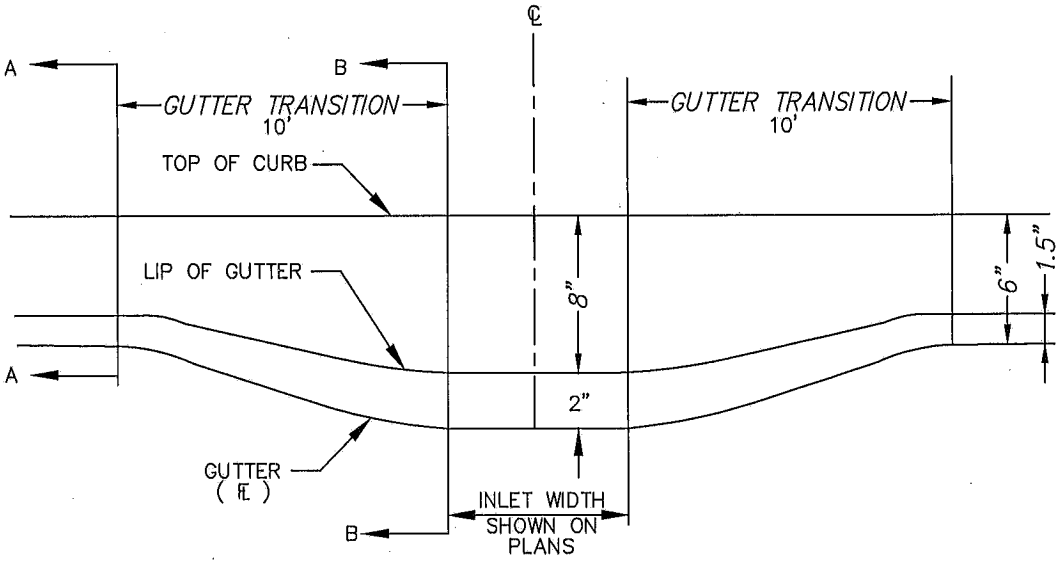

G CURB PROFILE – INLET TRANSITION

SHEET 2 OF 2

REVISION	BY	APPROVED	DATE
ORIGINAL	DPH	W. VALLE	11/17

CITY OF CHULA VISTA
ENGINEERING & CAPITAL PROJECTS
STANDARD DRAWING

CURB INLET CURB HEIGHT AND PAVEMENT TRANSITION

WILLIAM S. VALLE 11/21/2017
CITY ENGINEER

DRN–09

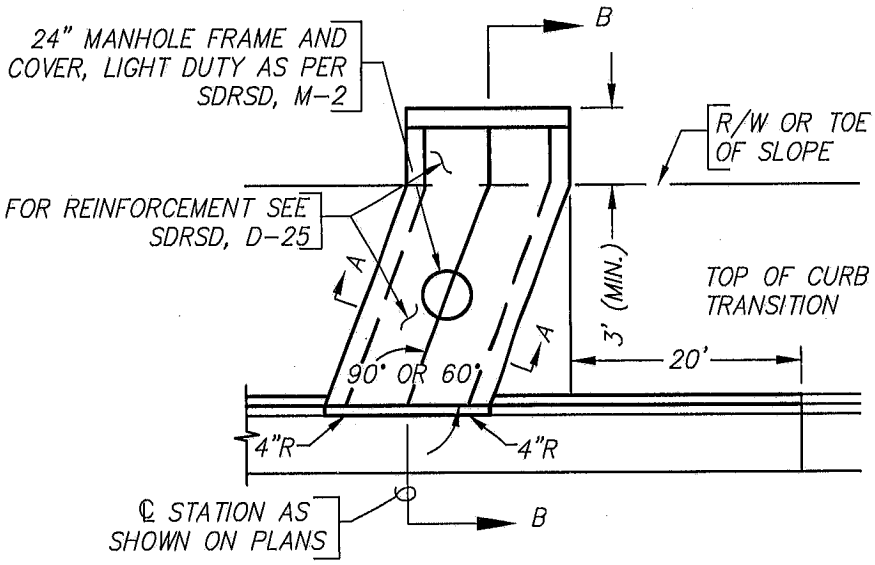

PLAN
NO SCALE

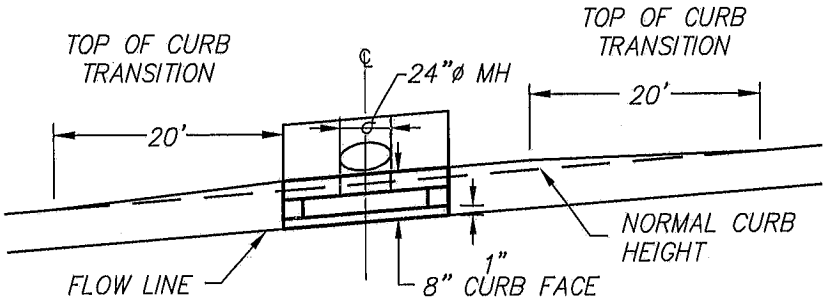

PROFILE
NO SCALE

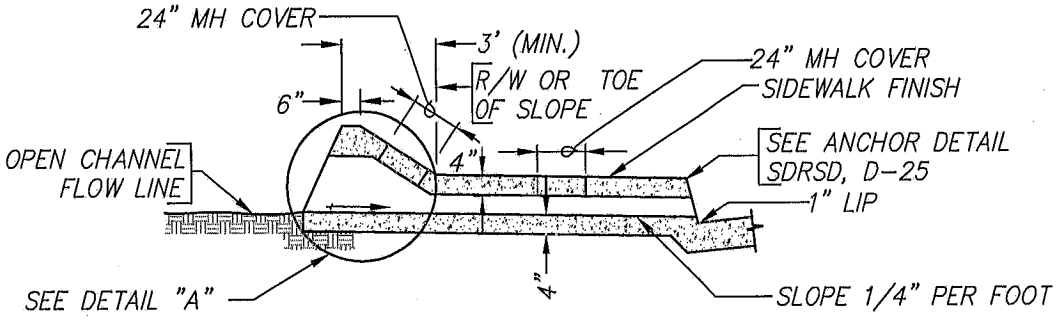

SECTION "B-B"

CURB OUTLET DETAIL
NO SCALE

SHEET 1 OF 2

REVISION	BY	APPROVED	DATE
ORIGINAL			12/90
REVISION	CVM	C. SWANSON	11/02
REVISION	DPH	W. VALLE	11/17

CITY OF CHULA VISTA
ENGINEERING & CAPITAL PROJECTS
STANDARD DRAWING

SIDEWALK UNDERDRAIN CURB OUTLET DETAIL

WILLIAM S. VALLE 11/21/2017
CITY ENGINEER

DRN-10

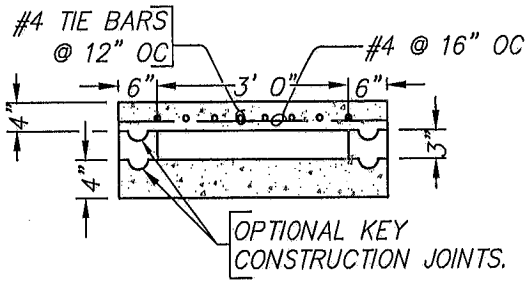

SECTION "A–A"
NO SCALE

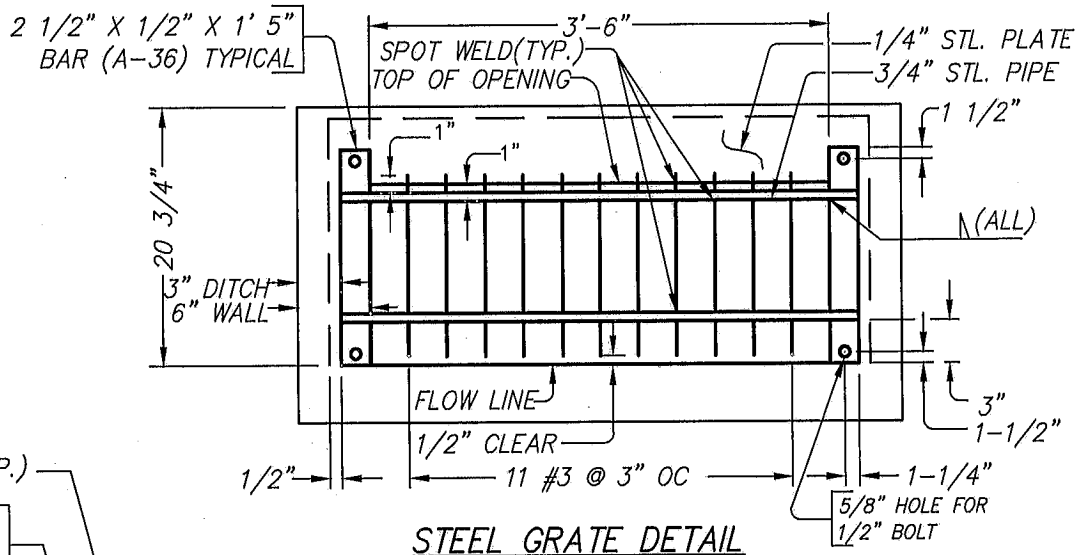

STEEL GRATE DETAIL
NO SCALE

GRATE TO BE HOT DIPPED
GALVANIZED AFTER FABRICATION

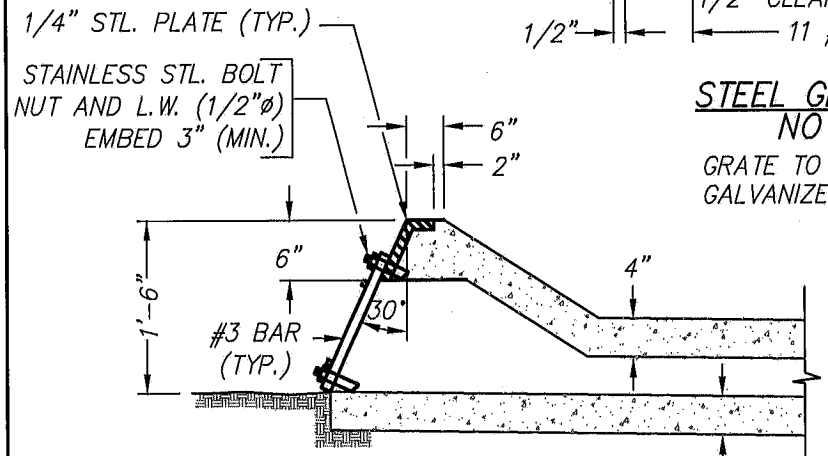

DETAIL "A"
NO SCALE

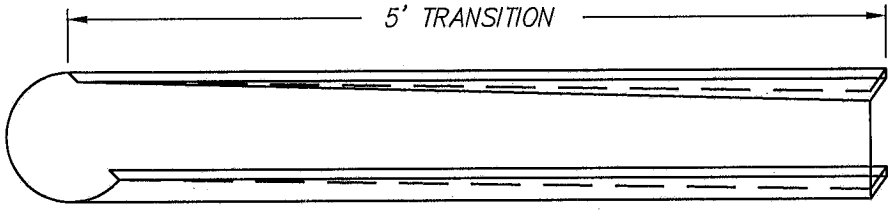

BROW DITCH TRANSITION DETAIL
NO SCALE

SHEET 2 OF 2

REVISION	BY	APPROVED	DATE
ORIGINAL			12/90
REVISION	CVM	C. SWANSON	11/02
REVISION	DPH	W. VALLE	11/17

CITY OF CHULA VISTA
ENGINEERING & CAPITAL PROJECTS
STANDARD DRAWING

SIDEWALK UNDERDRAIN BROW DITCH
TRANSITION DETAIL

WILLIAM S. VALLE 11/21/2017
CITY ENGINEER

DRN–10

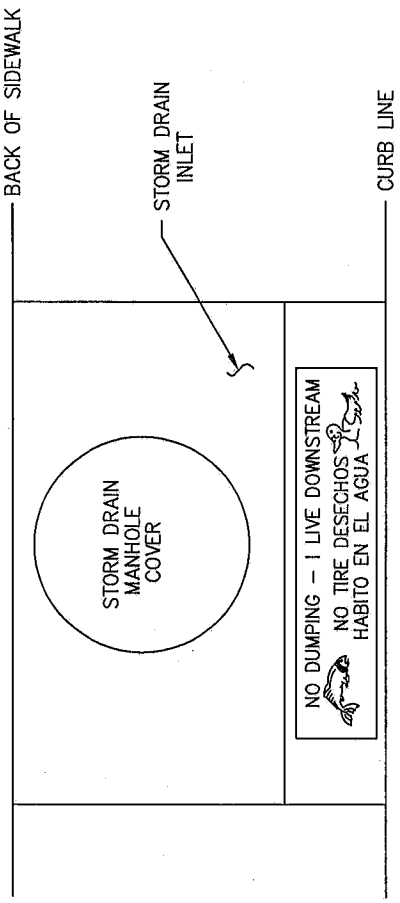

PLAN VIEW

STENCIL LOCATION
NO SCALE

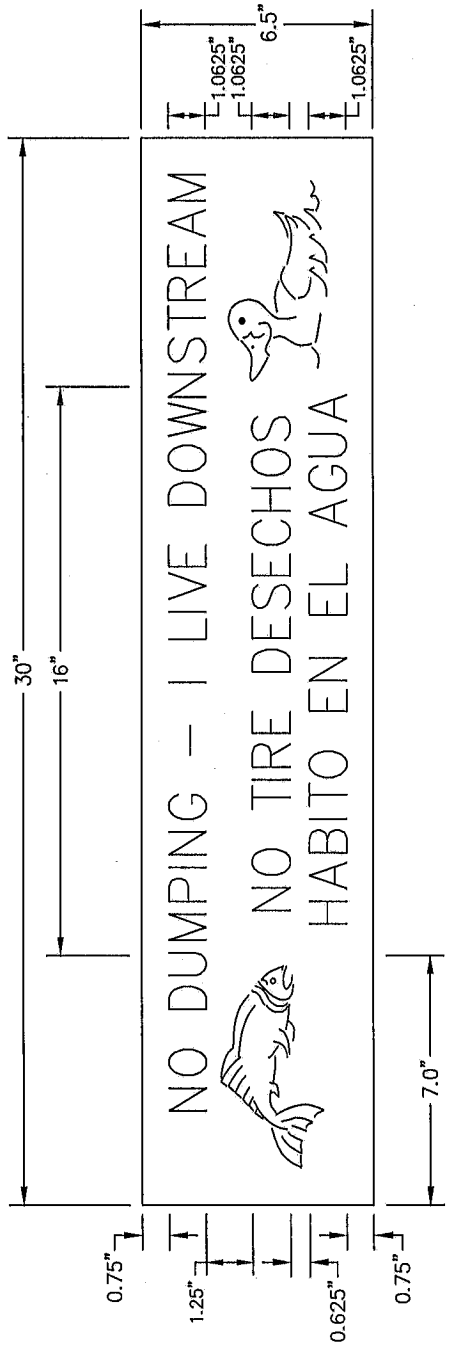

DETAIL: STENCIL

NO SCALE

NOTES:

1. DEPTH OF IMPRINT SHALL BE 0.25 INCH, MINIMUM.
2. STAMP SHALL BE RIGID AND FABRICATED FROM METAL, HARD RUBBER, OR APPROVED EQUAL.

REVISION	BY	APPROVED	DATE
ORIGINAL	CVM	C. SWANSON	11/02
REVISION	DPH	W. VALLE	11/17

CITY OF CHULA VISTA
ENGINEERING & CAPITAL PROJECTS
STANDARD DRAWING

STORM DRAIN STENCIL

WILLIAM S. VALLE 11/21/2017
CITY ENGINEER

DRN–11

NOTES:

1: CITY ENGINEER MAY APPROVE ALTERNATE DESIGNS AND PRODUCTS

2: PIPE PRODUCTS, FABRICS, ETC. SHALL BE IN ACCORDANCE WITH MANUFACTURER'S RECOMMENDATIONS AND/OR THE STANDARD SPECIFICATIONS.

3: PLACE HEADWALL APPROX. 10 FEET FROM STORM DRAIN TIE IN.

4: COORDINATE AREA DRAIN LOCATIONS WITH PROPOSED TREE LOCATIONS.

5: SOLID PIPE FITTINGS USE SAN SEWER ANGLE & WYE CONNECTIONS.

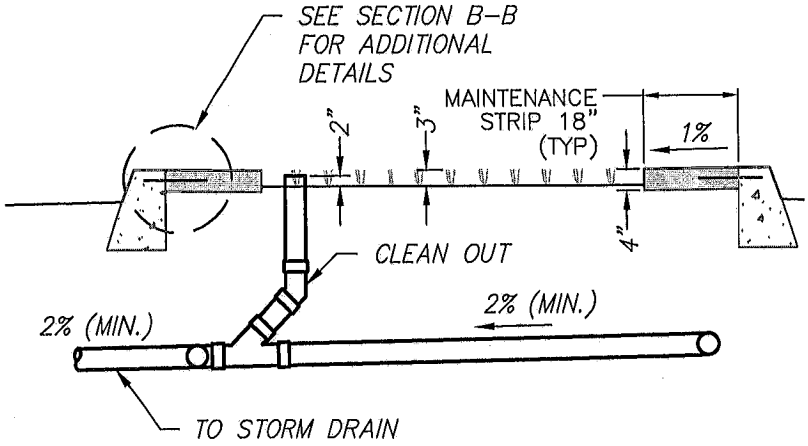

SECTION A-A

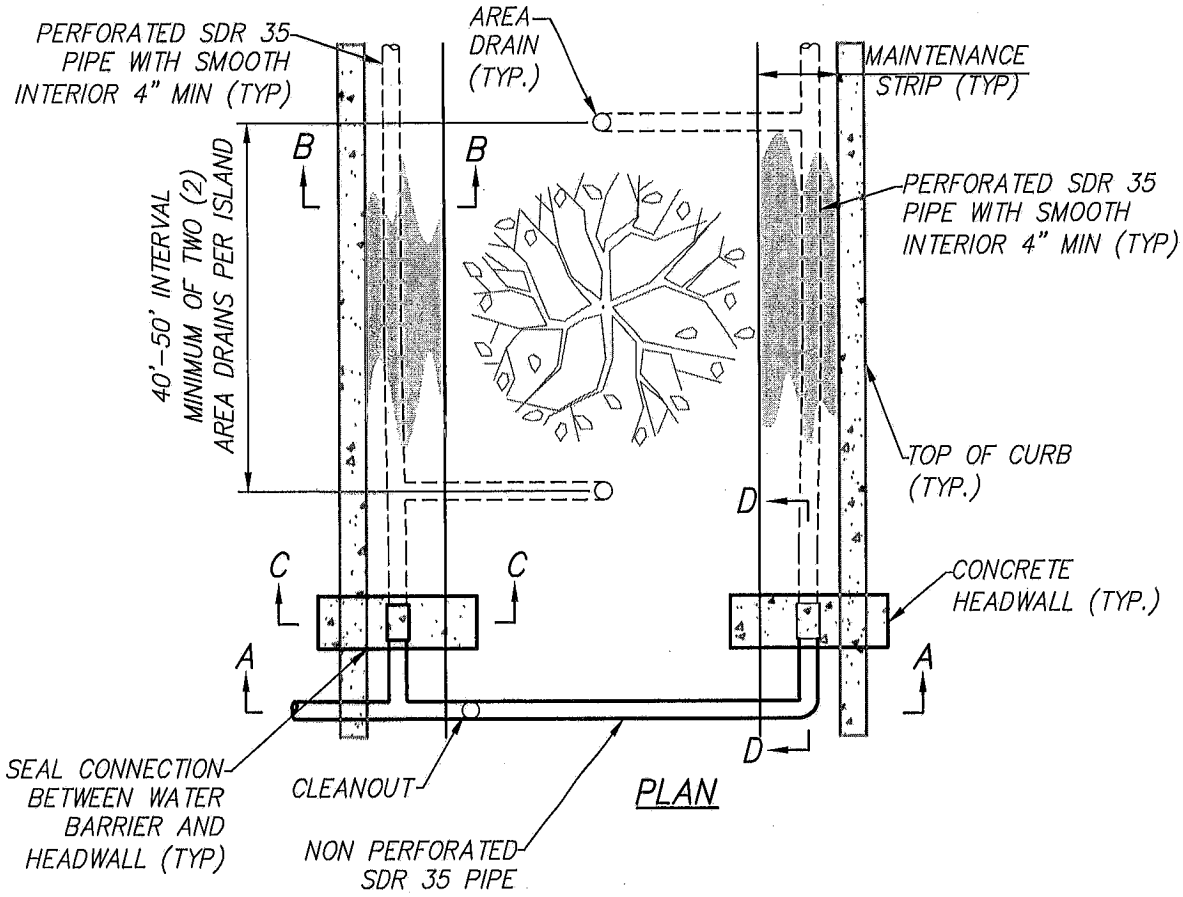

PLAN

SHEET 1 OF 2

REVISION	BY	APPROVED	DATE
ORIGINAL			07/75
REVISION	CVM	C. SWANSON	11/02
REVISION	DPH	W. VALLE	11/17

CITY OF CHULA VISTA
ENGINEERING & CAPITAL PROJECTS
STANDARD DRAWING

LANDSCAPE MEDIAN DRAIN

WILLIAM S. VALLE 11/21/2017
CITY ENGINEER

DRN-12

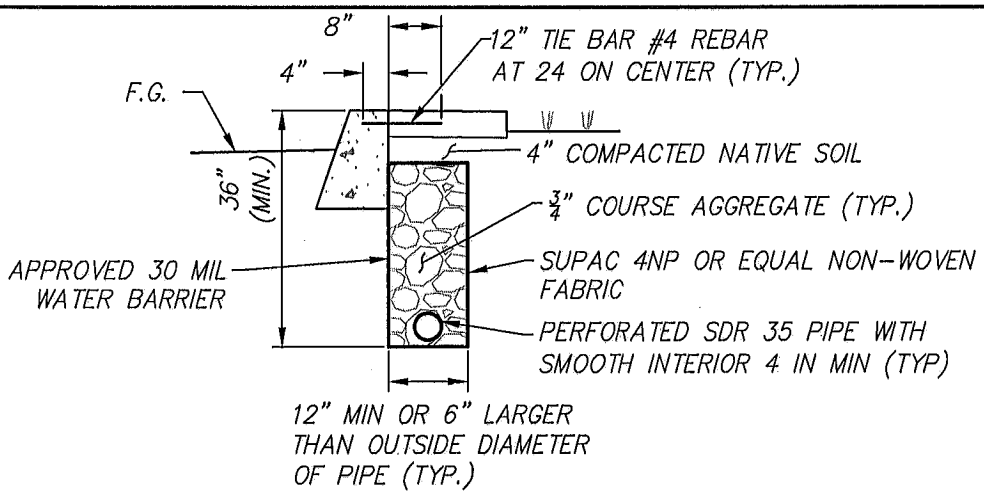

SECTION B–B
PERFORATED PIPE ALONG MEDIAN CURB

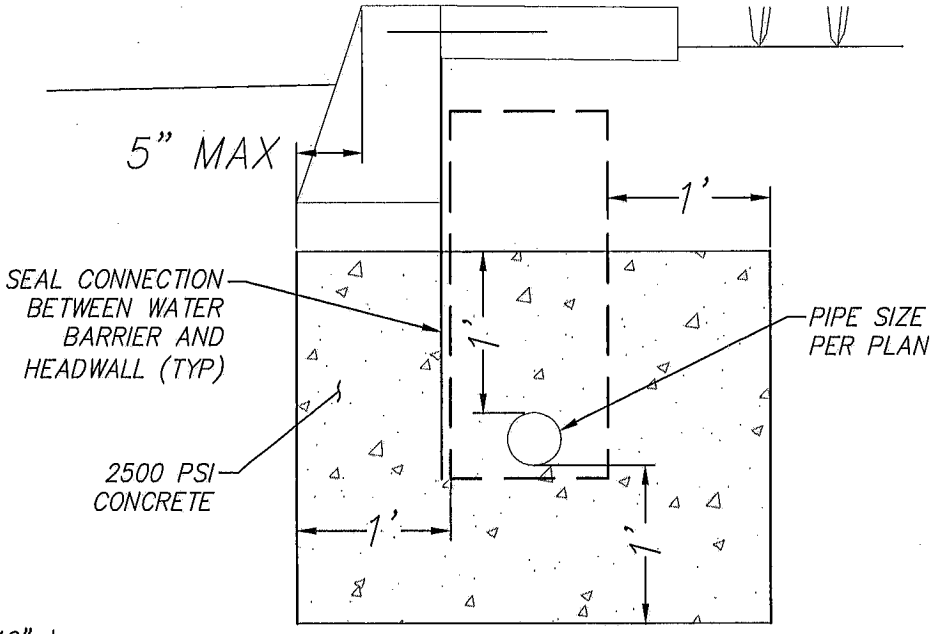

SECTION C–C:
PERFORATED PIPE CONNECTION AT HEADWALL

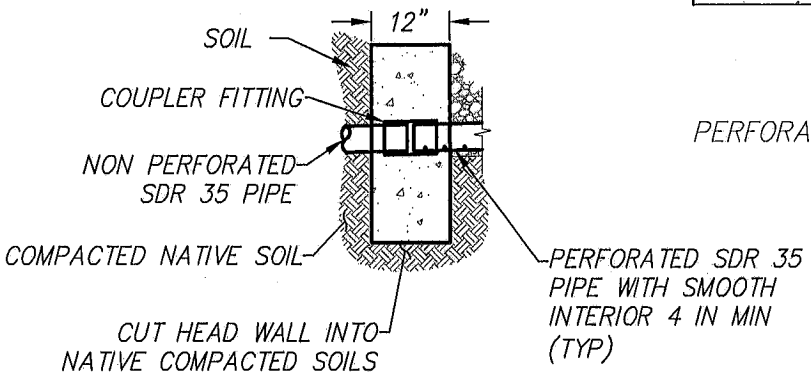

SECTION D–D
PERFORATED PIPE COUPLING AT HEADWALL

SHEET 2 OF 2

REVISION	BY	APPROVED	DATE
ORIGINAL			07/75
REVISION	CVM	C. SWANSON	11/02
REVISION	DPH	W. VALLE	11/17

CITY OF CHULA VISTA
ENGINEERING & CAPITAL PROJECTS
STANDARD DRAWING

LANDSCAPE MEDIAN DRAIN SECTIONS

WILLIAM S. VALLE 11/21/2017
CITY ENGINEER

DRN–12