GENERAL SURFACE IMPROVEMENTS
(GSI)

CITY OF CHULA VISTA

DESIGN AND CONSTRUCTION STANDARD DRAWINGS 2017

DEPARTMENT OF ENGINEERING AND CAPITAL PROJECTS

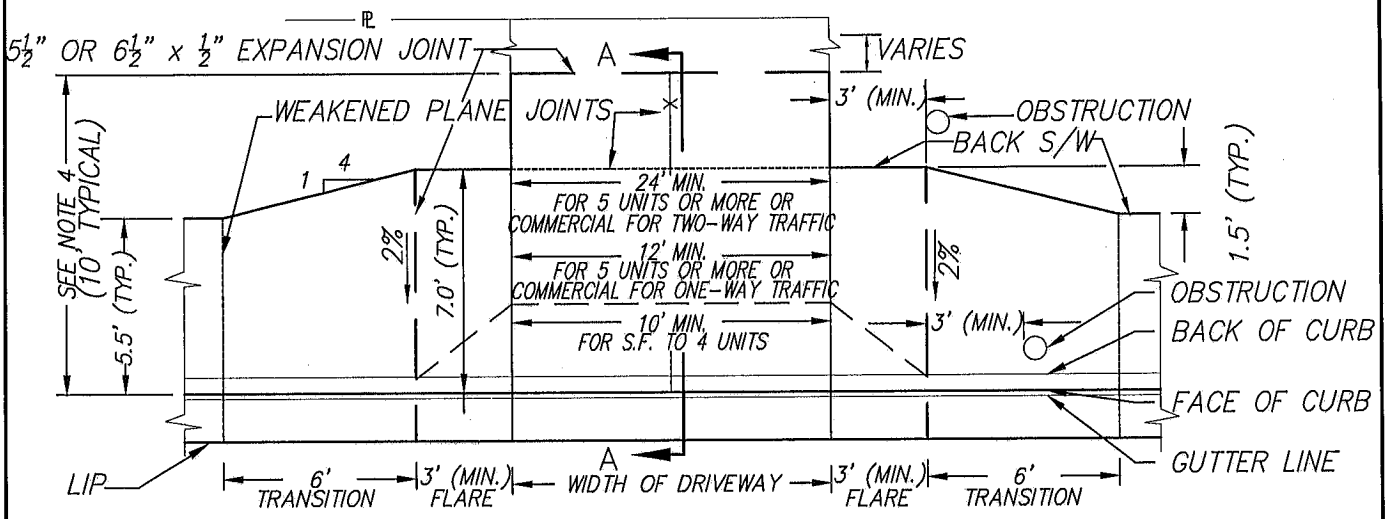

PLAN
NO SCALE

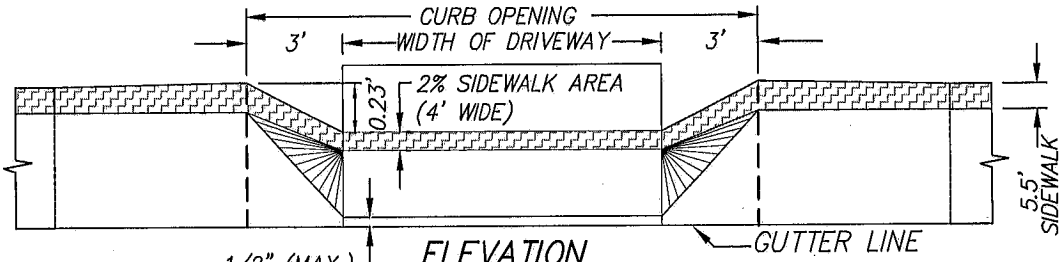

ELEVATION
NO SCALE

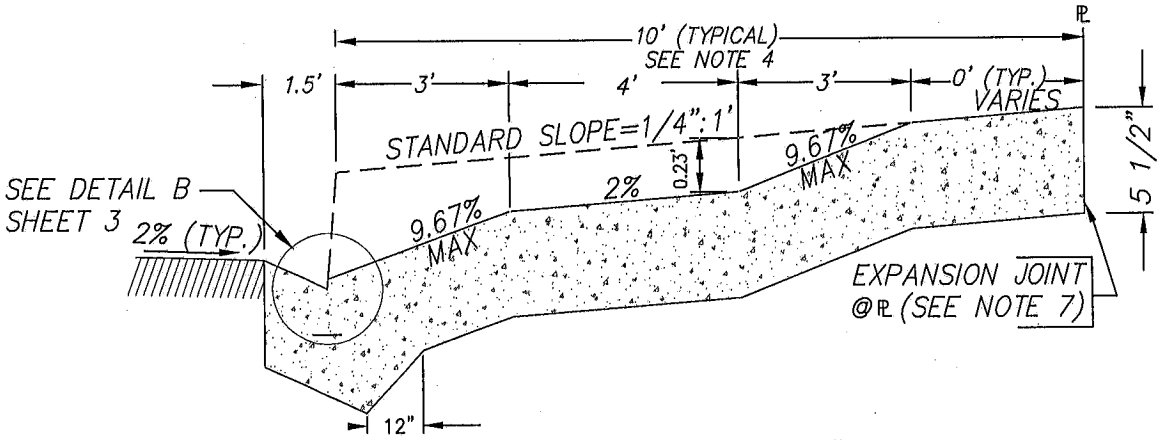

SECTION "A–A"
NO SCALE

SHEET 1 OF 3

REVISION	BY	APPROVED	DATE
ORIGINAL			7/75
REVISION	CVM	C. SWANSON	11/02
REVISION	DPH	W. VALLE	11/17

CITY OF CHULA VISTA
ENGINEERING & CAPITAL PROJECTS
STANDARD DRAWING

DRIVEWAY WITH MONOLITHIC CURB, GUTTER, AND SIDEWALK

WILLIAM S. VALLE 11/21/2017
CITY ENGINEER

GSI–01

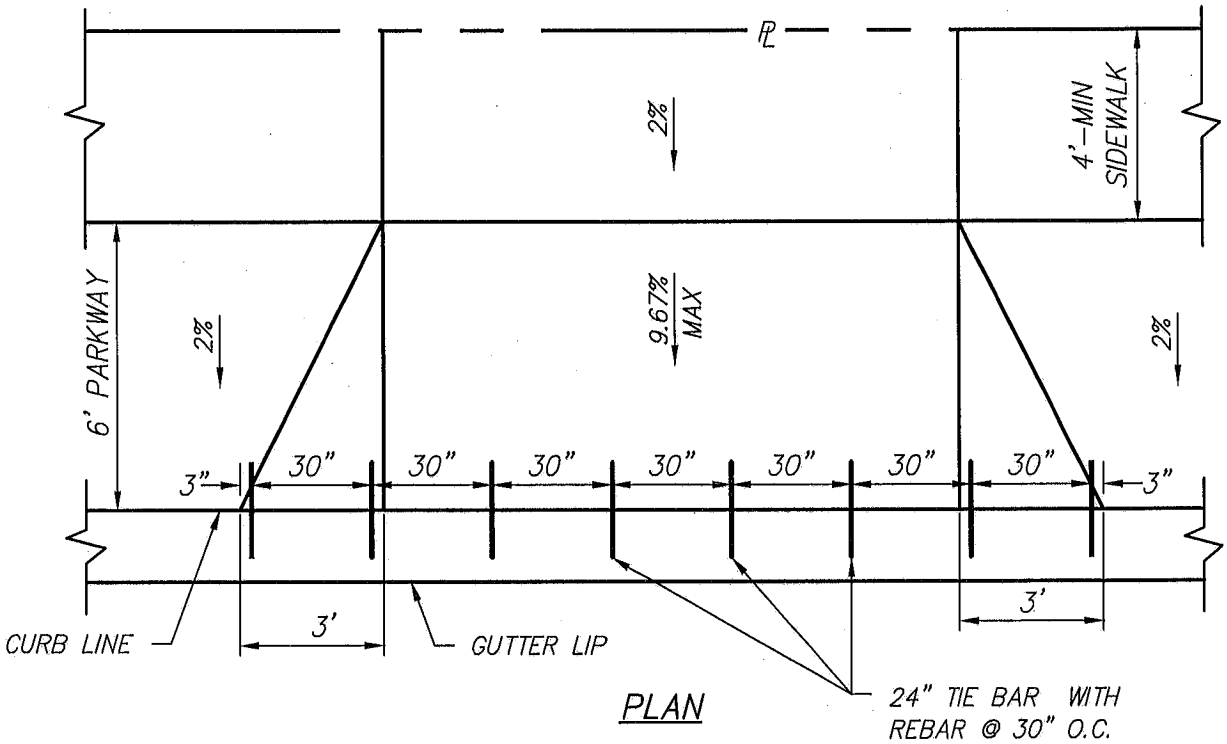

PLAN

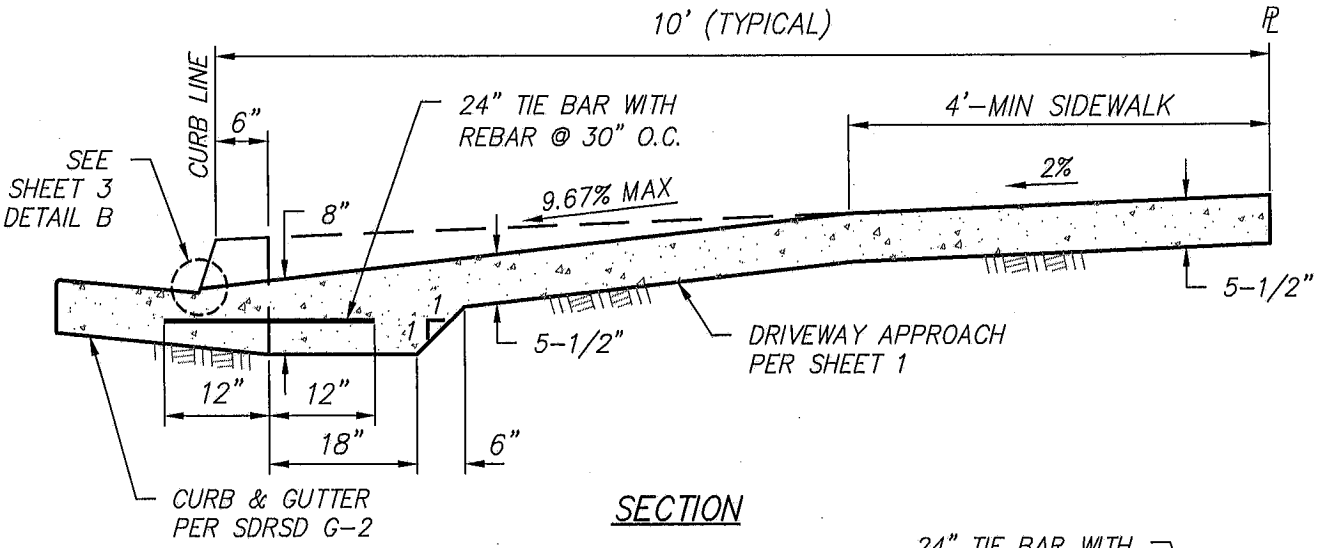

SECTION

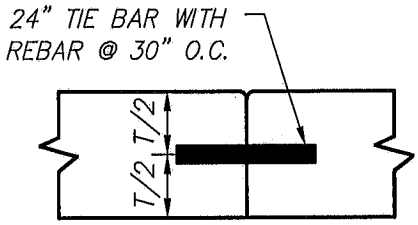

CONCRETE JOINT DETAIL

NOTE:

TIE BARS SHALL BE CAST IN CONCRETE AND HELD IN POSITION BY MEANS APPROVED BY THE INSPECTOR OR TIE BARS MAY BE INSTALLED BY DRILLING AND BONDING WITH AN APPROVED EPOXY ADHESIVE. (EPOXY ADHESIVE SHALL HAVE A MINIMUM BOND STRENGTH IN 1 DAY EQUAL TO 2000 PSI. DRILL BIT SHALL EQUAL BAR DIAMETER PLUS 1/8".)

FOR ADDITIONAL NOTES AND SPECIFICATIONS, SEE SHEET 3.

REVISION	BY	APPROVED	DATE
ORIGINAL			3/99
REVISION	CVM	C. SWANSON	11/02
REVISION	DPH	W. VALLE	11/17

CITY OF CHULA VISTA
ENGINEERING & CAPITAL PROJECTS
STANDARD DRAWING

DRIVEWAY WITH NON-CONTIGUOUS SIDEWALK

WILLIAM S. VALLE 11/21/2017
CITY ENGINEER

GSI-01

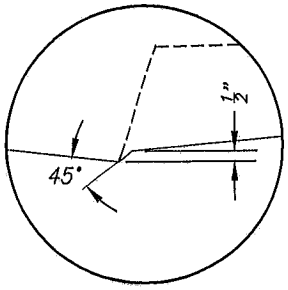

DETAIL B:
NO SCALE

GENERAL NOTES:

1. THIS STANDARD SHALL GOVERN THE CONSTRUCTION OF ALL DRIVEWAYS.

2. CURB OPENINGS PER LOT:
   SINGLE FAMILY RESIDENTIAL – 16' MIN,. 25' MAX. A MAXIMUM OF 40% FRONTAGE FOR CURB
   OPENINGS, UNLESS OTHERWISE APPROVED BY THE CITY ENGINEER.
   MULTI-RESIDENTIAL & COMMERCIAL – 16' MIN., 35' MAX. A MAXIMUM OF 60% FRONTAGE FOR
   CURB OPENINGS, UNLESS OTHERWISE APPROVED BY THE CITY ENGINEER.

3. BOTH RESIDENTIAL & COMMERCIAL CURB OPENING SHALL BE A MINIMUM OF 8' FROM ANY P.C.R., AND 3' FROM ANY OBSTRUCTION, I.E. POLES, HYDRANTS, ETC., UNLESS OTHERWISE APPROVED.

4. THE MINIMUM DISTANCE SHALL BE 10' OR TO PROPERTY LINE WHICH EVER IS LESS.

5. FOR CONCRETE JOIN DETAILS SEE STANDARDS SSM.

6. ALL CONCRETE SHALL BE 517-C-2500 EXCEPT FOR COMMERCIAL DRIVEWAYS.

7. IF PROPERTY LINE IS LESS THAN 10' FROM FACE OF CURB, PLACE EXPANSION JOINT AT PROPERTY LINE.

8. FOR COMMERCIAL DRIVEWAYS, CONCRETE SHALL BE 560-C-3250 IN CURB OPENING AREA. WHERE THE R-VALUE IS LESS THAN 40, THE THICKNESS SHALL BE INCREASED TO 6½" FOR COMMERCIAL DRIVEWAYS ONLY.

*9. ADDITIONAL WEAKENED PLANE JOINTS ARE REQUIRED WHEN THE WIDTH OF DRIVEWAY EXCEEDS 18'. THE NUMBER OF ADDITIONAL WEAKENED PLANE JOINTS ARE DETERMINED AS FOLLOWS: DIVIDE THE WIDTH OF THE DRIVEWAY BY 1.5 TIMES THE DEPTH (NORMALLY 10'). E.G. 25/1.5 X 10 = 1.67. LESS THAN 2, THEREFORE USE 1 JOINT.

10. NOT TO BE USED WHEN CURB EXCEEDS 6'

REVISION	BY	APPROVED	DATE
ORIGINAL			7/75
REVISION	CVM	C. SWANSON	11/02
REVISION	DPH	W. VALLE	11/17

CITY OF CHULA VISTA
ENGINEERING & CAPITAL PROJECTS
STANDARD DRAWING

DRIVEWAY NOTES

WILLIAM S. VALLE 11/21/2017
CITY ENGINEER

GSI-01

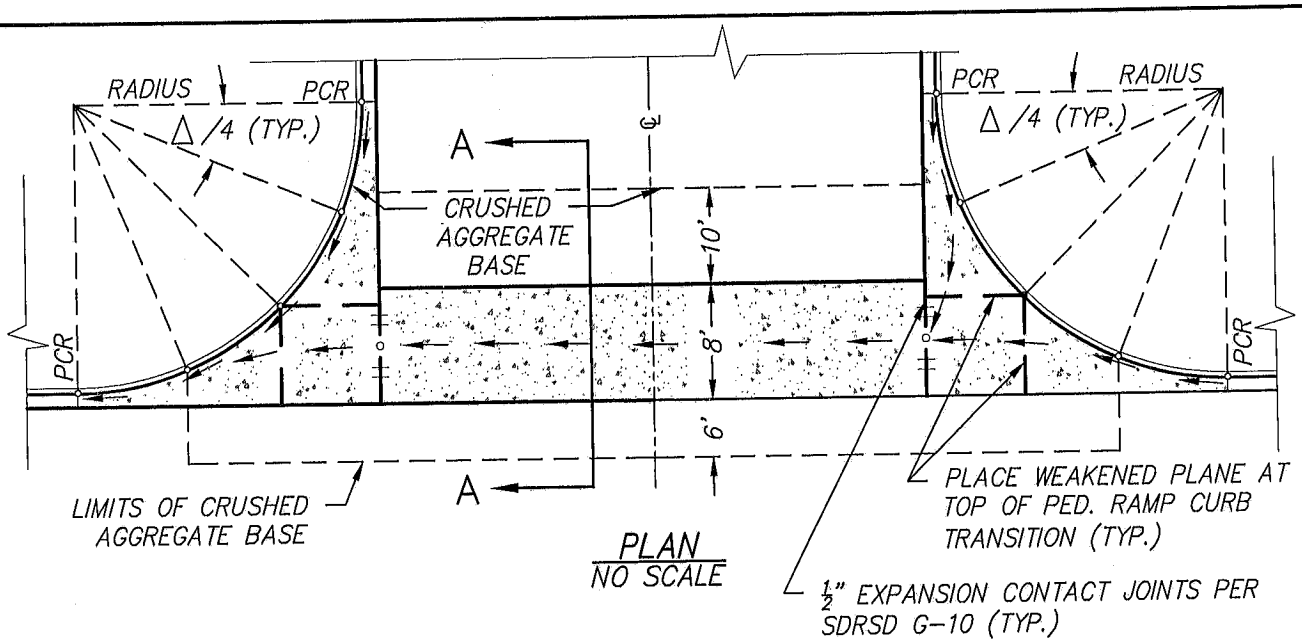

PLAN
NO SCALE

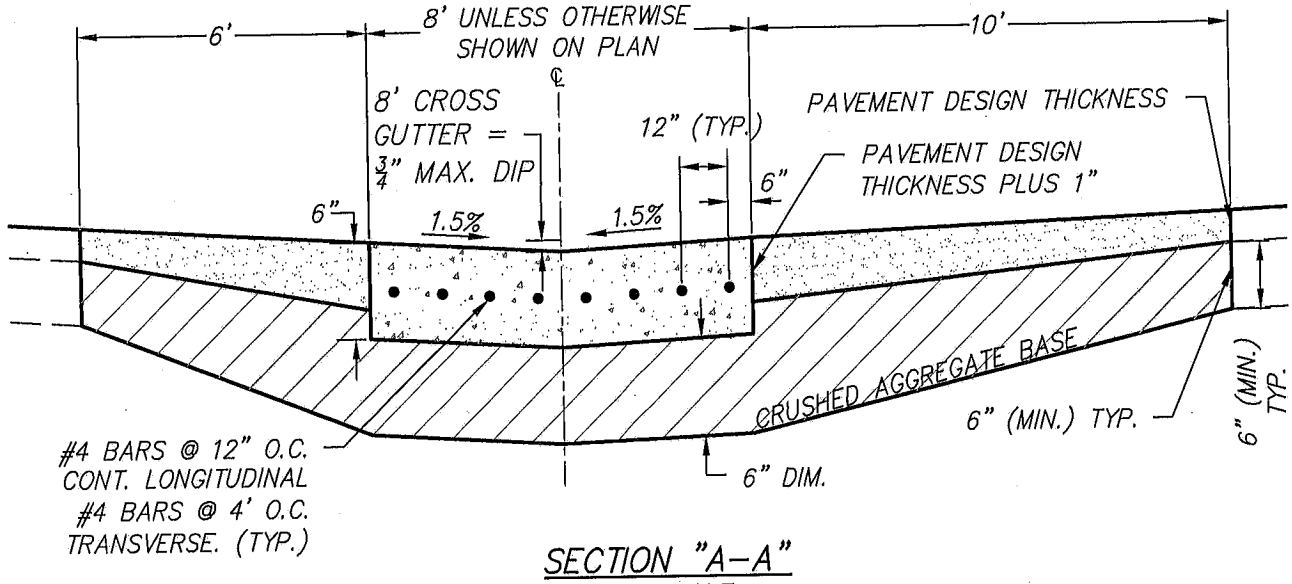

SECTION "A-A"
NO SCALE

NOTES:

1. ALL CONCRETE TO BE 560-C-3250.
2. — — — — = HORIZONTAL LIMITS OF CRUSHED AGGREGATE BASE. TO BE A MINIMUM OF 6" THICK UNDER CROSS GUTTER AND RETURN SEGMENTS (SPANDRELS), COMPACTED TO 95%.
3. RETURN SEGMENTS TO HAVE 6" X 6", 10 GAGE WIRE MESH (#4 REBAR @ 12" O.C. BOTH WAYS MAY BE SUBSTITUTED).
4. ——— ——— = WEAKENED PLANE JOINTS. OTHER EXPANSION JOINTS AND WEAKENED PLANE JOINTS FOR SIDEWALKS, CURB AND GUTTER PER
5. ←— ←— =TYPICAL FLOWLINES.
6. o = ELEVATIONS TO BE SHOWN ON PLANS.
7. RETURN SEGMENTS TO BE 6" THICK.
8. PLACE WEAKEN PLANE JOINT PER AT TOP OF PEDESTRIAN RAMP CURB TRANSITION.

SHEET 1 OF 2

REVISION	BY	APPROVED	DATE
ORIGINAL			7/75
REVISION	CVM	C. SWANSON	11/02
REVISION	DPH	W. VALLE	11/17

CITY OF CHULA VISTA
ENGINEERING & CAPITAL PROJECTS
STANDARD DRAWING

CROSS GUTTER

WILLIAM S. VALLE 11/21/2017
CITY ENGINEER

GSI-02

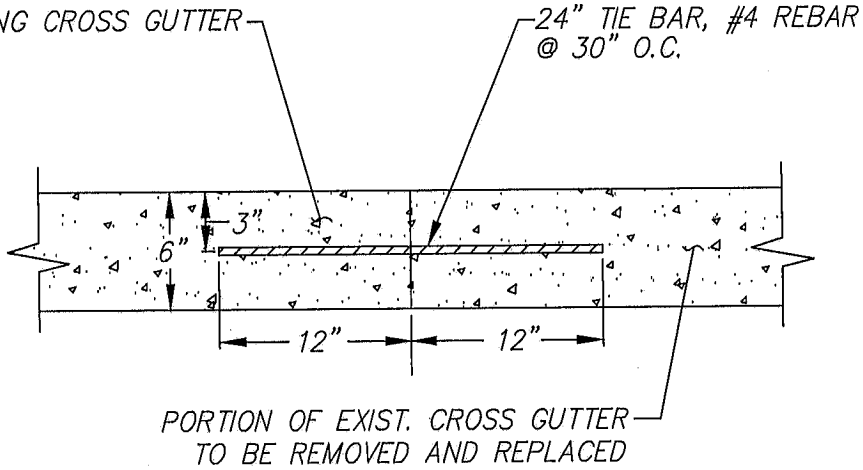

NOTE: TIE BARS SHALL BE INSTALLED BY DRILLING AND BONDING WITH AN APPROVED EPOXY ADHESIVE. (EPOXY ADHESIVE SHALL HAVE A MINIMUM BOND STRENGTH IN ONE (1) DAY EQUAL TO 2000 PSI. DRILL BIT SHALL EQUAL BAR DIAMETER PLUS 1/8".) DRILL AND SET TIE BARS IN EXISTING CONCRETE WHEN CONNECTING TO NEW CONCRETE.

SHEET 2 OF 2

REVISION	BY	APPROVED	DATE
ORIGINAL			7/75
REVISION	CVM	C. SWANSON	11/02
REVISION	DPH	W. VALLE	11/17

CITY OF CHULA VISTA
ENGINEERING & CAPITAL PROJECTS
STANDARD DRAWING

CROSS GUTTER DOWEL CONNECTIONS

WILLIAM S. VALLE 11/21/2017
CITY ENGINEER

GSI-02

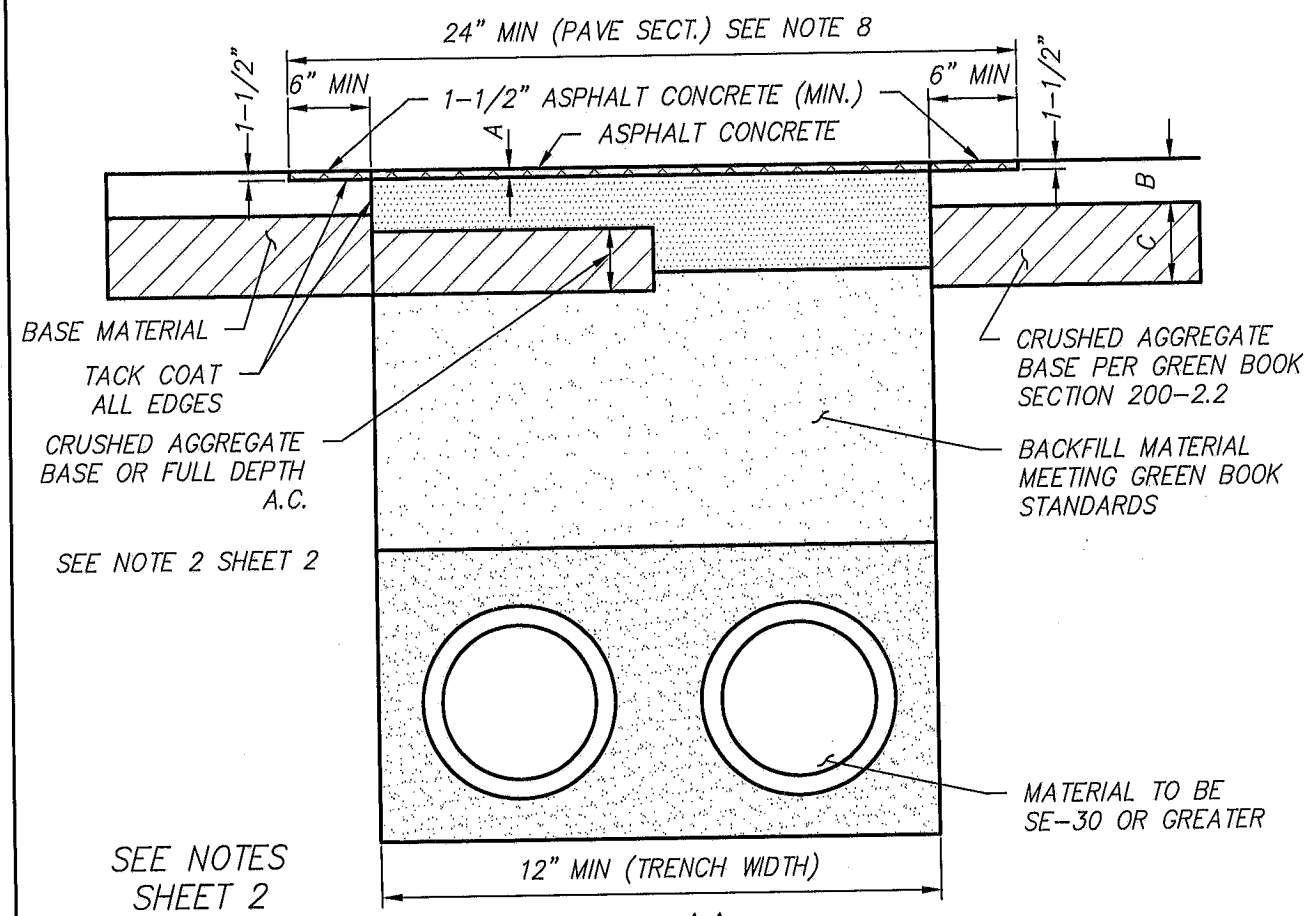

TYPE 'J'

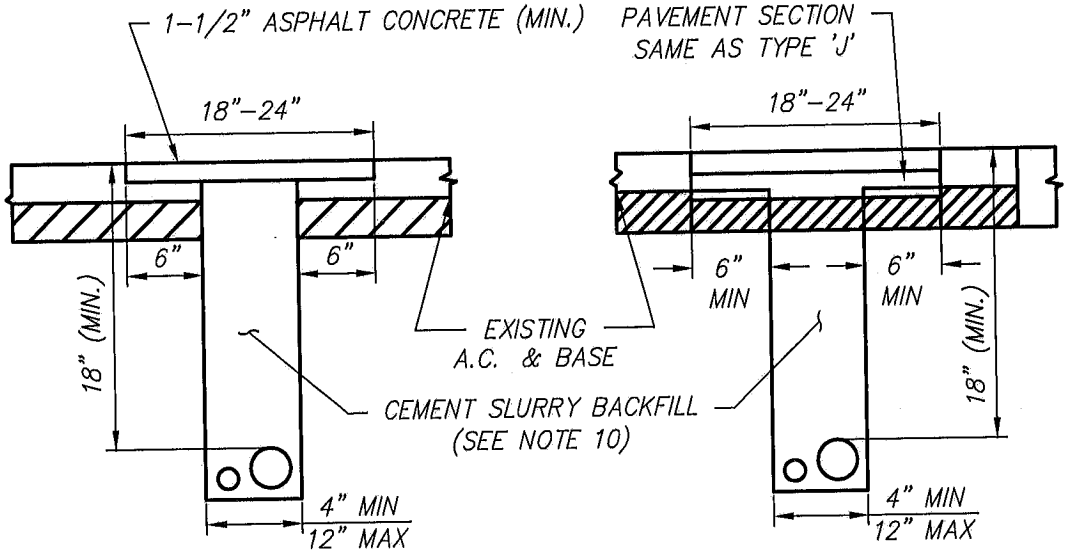

TYPE '1'-(1)"

TYPE '1'-(2)"

SHEET 1 OF 3

REVISION	BY	APPROVED	DATE
ORIGINAL			2/90
REVISION	CVM	A. AGHA	1/04
REVISION	DPH	W. VALLE	11/17

CITY OF CHULA VISTA
ENGINEERING & CAPITAL PROJECTS
STANDARD DRAWING

TRENCH BACKFILL TYPE I AND J

WILLIAM S. VALLE 11/21/2017
CITY ENGINEER

GSI-03

NOTES:

1. EXISTING ASPHALT SHALL BE CUT AND REMOVED IN SUCH A MANNER SO AS NOT TO TEAR, BULGE, OR DISPLACE ADJACENT PAVEMENT. EDGES SHALL BE CLEAN AND VERTICAL. ALL CUTS SHALL BE PARALLEL OR PERPENDICULAR TO STREET CENTERLINE, WHEN PRACTICAL.

2. THE REMOVED PAVEMENT SECTION SHALL BE REPLACED WITH BASE MATERIAL AND ASPHALT CONCRETE. THE MINIMUM THICKNESS OF THE REPLACEMENT ASPHALT CONCRETE (A) SHALL BE: A=(B+1")
   REPLACEMENT BASE SHALL BE CRUSHED AGGREGATE BASE 4" MIN. THICK.
   IF AGGREGATE BASE IS TO BE REPLACED WITH ASPHALT CONCRETE, THEN THE MINIMUM THICKNESS OF THE ASPHALT CONCRETE SHALL BE:
   ON COMPACTED FILL – A=(B+1") + (C/2)
   ON SLURRY BACKFILL – A=(B+1") + (2C/3)
   (SEE SLURRY REQUIREMENTS BELOW)
   IF CEMENT TREATED BASE – A=(B+1") + (2C/3)

3. A TACK COAT OF EMULSIFIED ASPHALT (SS–1H OR RS–1) SHALL BE APPLIED TO ALL SURFACES WHICH WILL BE IN CONTACT WITH THE REPLACEMENT ASPHALT CONCRETE.

4. THE FINISH COURSE FOR RESURFACING SHALL BE LAID DOWN USING A SPREADER BOX. ALL RESURFACING SHALL BE SEAL COATED WITH AN EMULSIFIED ASPHALT AND COVERED WITH SAND. *CHIP SEALING SHALL BE APPLIED AS REQUIRED BY THE CITY.

5. ASPHALT CONCRETE RESURFACING TO BE TYPE III, C–3 AR4000 FOR TOP COURSE (4" MAX. THICKNESS), (½" AGGREGATE). IF GREATER THAN 4", USE 2 OR MORE LIFTS. TOP LIFT WITH ½" AGGREGATE; LOWER LIFTS WITH ¾" AGGREGATE.

6. SLOUGHING OF TRENCH UNDER PAVEMENT SHALL BE CAUSE FOR REQUIRING ADDITIONAL PAVEMENT AND BASE. LIMITS OF WORK TO BE DETERMINED BY THE CITY ENGINEER.

7. EXISTING STRIPING AND/OR TRAFFIC SIGNAL LOOPS TO BE REPLACED WITHIN 5 WORKING DAYS.

8. IN AN EFFORT TO MAINTAIN A STREET'S EXPECTED LIFESPAN, RETURN THE STREET TO THE SAME OR SIMILAR CONDITION AS BEFORE TH TRENCHING TOOK PLACE, AND TO MEET CITY OF CHULA VISTA AND GREENBOOK STANDARDS PERTAINING TO ROAD SMOOTHNESS:

   * IF THE TRENCH IS LOCATED WITHIN A BIKE LANE, THEN THE ENTIRE BIKE LANE WIDTH SHALL BE COLD PLANED 1–1/2" MINIMUM AND OVERLAYED 1–1/2" MINIMUM.

   * IF THE TRENCH IS WITHIN 24" OF A CONCRETE STRUCTURE (I.E. LIP OF GUTTER, VAULT, ETC.) THEN THE AREA BETWEEN THE TRENCH AND THE CONCRETE STRUCTURE SHALL BE COLD PLANED 1–1/2" MINIMUM AND OVERLAYED 1–1/2" MINIMUM.

   * IF THE TRENCH IS LOCATED LONGITUDINALLY WITHIN THE TRAVEL LANE OF A PRIME, MAJOR, OR 4–LANE COLLECTOR STREET, THEN THE ENTIRE LANE SHALL BE COLD–PLANE 1–1/2" MINIMUM AND OVERLAYED 1–1/2" MINIMUM. HOWEVER, THE CITY ENGINEER MAY, ON A CASE–BY–CASE BASIS AND AT HID/HER SOLE DISCRETION, MODIFY THE REQUIREMENT CO COLD PLANE AND OVERLAY THE ENTIRE LANE BASED UPON THE FOLLOWING CRITERIA: (1) EXISTING CONDITION OF THE PAVEMENT; (2) FUTURE REHABILITATION STRATEGIES AND SCHEDULE; (3) DEPTH OF TRENCH; OTHER TRENCH WORK IN THE AREA; (5) EXISTENCE OF A COMPARABLE TRENCH PAVING TECHNOLOGY OR TECHNIQUES WHICH WOULD ACHIEVE THE DESIRED ROAD SMOOTHNESS AND LONGEVITY; AND (6) OTHER SITE–SPECIFIC CONDITIONS AND FACTORS DEEMED BY THE CITY ENGINEER TO ALLEVIATE THE NEED TO COLD–PLANE AND OVERLAY THE ENTIRE LANE.

   * THOSE ENTITIES WISHING THE CITY ENGINEER TO CONSIDER MODIFYING THE REQUIREMENT TO COLD–PLANE AND OVERLAY THE ENTIRE LANE SHALL, PRIOR TO PERMIT ISSUANCE , SUBMIT A WRITTEN REQUEST FOR SUCH MODIFICATION. SAID WRITTEN REQUEST SHALL INCLUDE A DETAILED DESCRIPTION OF THE PROJECT, THE PROJECT AREA AND THE REASONS WHY THE FULL–LANE REQUIREMENT SHOULD BE WAIVED.

9. *IF THE STREET HAS EXISTING PAVEMENT FABRIC, THEN FABRIC OF A SIMILAR QUALITY MUST BE USED IN THE TRENCH REPAIR.

TYPE "I" ONLY (NARROW TRENCH)

10. CEMENT SLURRY BACKFILL:
    A. CEMENT SLURRY BACKFILL SHALL HAVE A MINIMUM SLUMP OF 5–INCHES.
    B. CEMENT SLURRY BACKFILL SHALL BE THOROUGHLY CONSOLIDATED TO ENCASE CONDUITS. TAMPERS OR VIBRATORS SHALL BE USED.
    C. LEAN CONCRETE (TRENCH SLURRY BACKFILL) AS SPECIFIED IN SECTION 201–1.1.2 OF THE GREEN BOOK CONCRETE CLASS 100–E–100.
    D. ALLOW CEMENT SLURRY BACKFILL 24 HOURS MINIMUM TO CURE BEFORE RESURFACING.

11. TYPE I–1 REQUIRES THE PLACEMENT OF THE PETROTAC TYPE PAVEMENT FABRIC AFTER THE PLACEMENT OF THE TACK COAT. TACK COAT MUST BE APPLIED OVER PETROTAC.

12. IN STREET WITH FABRIC REINFORCING MATERIAL INSTALLED, SLURRY BACKFILL SHALL BE BROUGHT UP TO THE EXISTING FABRIC MATERIAL.

*ITEMS, IF THEY APPLY, TO BE KNOWN AT TIME OF PERMIT.

REVISION	BY	APPROVED	DATE
ORIGINAL			2/90
REVISION	CVM	A. AGHA	1/04
REVISION	DPH	W. VALLE	11/17

CITY OF CHULA VISTA
ENGINEERING & CAPITAL PROJECTS
STANDARD DRAWING

TRENCH BACKFILL NOTES

WILLIAM S. VALLE 11/21/2017
CITY ENGINEER

GSI–03

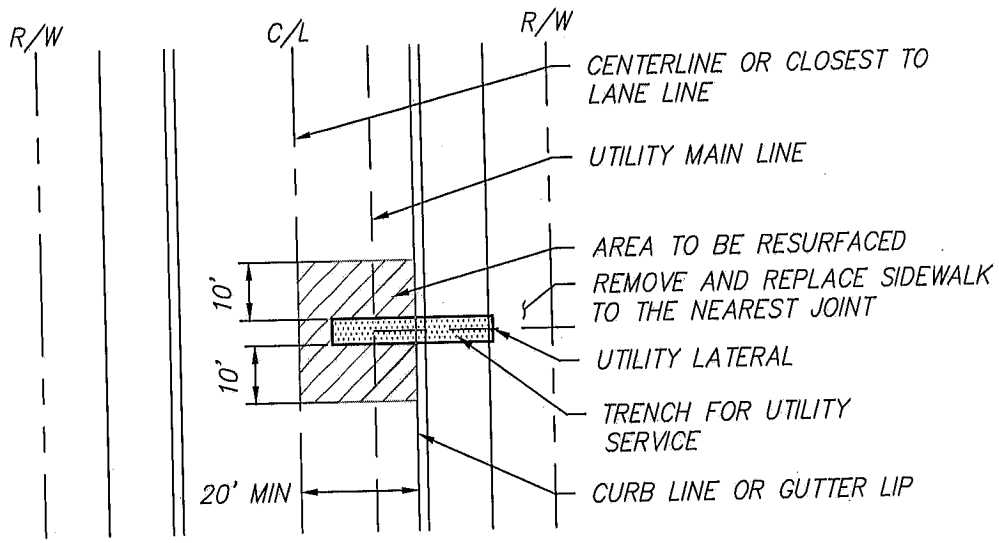

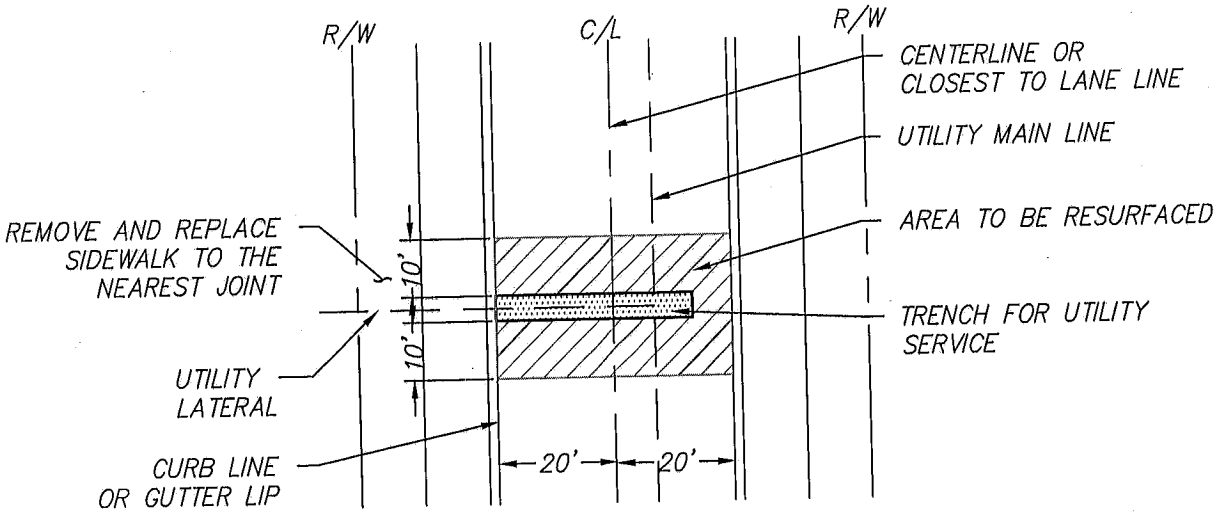

TRENCH REPAIR REQUIREMENTS FOR STREET UNDER MORATORIUM

THE FOLLOWING TRENCH REPAIR REQUIREMENTS ARE IN ADDITION TO THOSE LISTED IN CHULA VISTA CONSTRUCTION STANDARDS CVCS 3 & 4:

1. LATERAL TRENCHES (DETAILS ABOVE) – EXTEND T-CUT GRIND AND OVERLAY LIMITS TO 10 FEET BEYOND EACH SIDE OF THE TRENCH AND OVER THE ENTIRE LANE THAT IS IMPACTED (REGARDLESS OF STREET CLASSIFICATION).
2. LONGITUDINAL TRENCHES (PARALLEL TO THE CURB) – GRIND 1-1/2 INCHES MINIMUM AND PLACE 1-1/2 INCHES MINIMUM OVERLAY OVER THE ENTIRE LANE THAT IS IMPACTED (REGARDLESS OF THE CLASSIFICATION OF THE STREET).
3. REPLACE EXISTING PAVEMENT IN KIND TO MATCH EXISTING OR BETTER OR AS DIRECTED BY THE CITY ENGINEER.
4. DECORATIVE SURFACE PAVEMENT SHALL BE PROTECTED IN PLACE OR REPLACED WITH THE SAME MATERIAL WHEN DAMAGED OR AS DIRECTED BY THE CITY ENGINEER.

PER THE UTILITY TRENCH MORATORIUM POLICY NO.585-096:
3-YEAR MORATORIUM FOR STREETS RECEIVING A SLURRY OR CHIP SEAL.
5-YEAR MORATORIUM FOR NEWLY CONSTRUCTED, RECONSTRUCTED, AND OR OVERLAID STREETS.

SHEET 3 OF 3

REVISION	BY	APPROVED	DATE
ORIGINAL	DPH	W. VALLE	11/17

CITY OF CHULA VISTA
ENGINEERING & CAPITAL PROJECTS
STANDARD DRAWING

MORATORIUM ROADWAY TRENCH RESURFACING

WILLIAM S. VALLE 11/21/2017
CITY ENGINEER

GSI-03

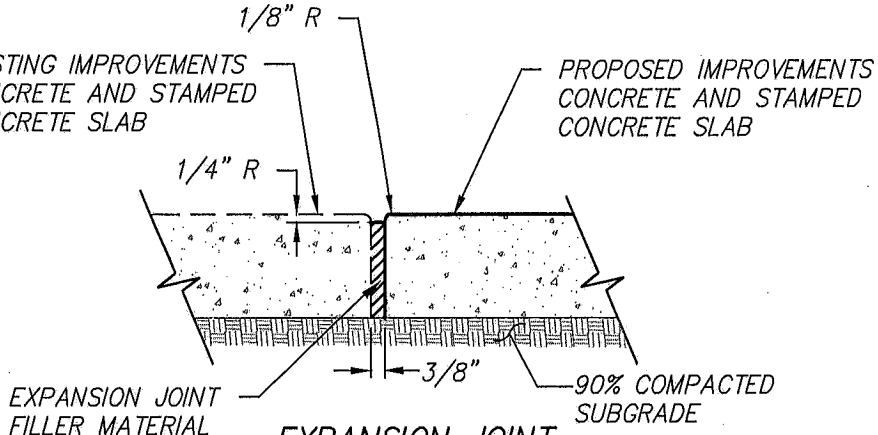

EXPANSION JOINT
NOT TO SCALE

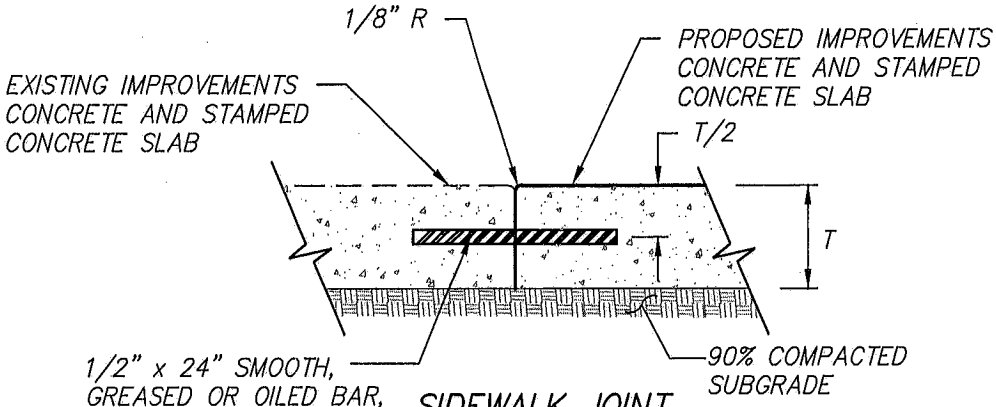

SIDEWALK JOINT
NOT TO SCALE

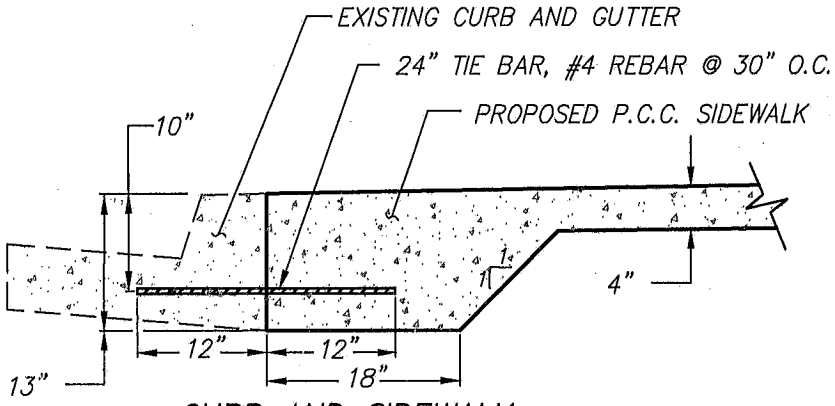

CURB AND SIDEWALK
CONCRETE JOINT DETAIL
NOT TO SCALE

REVISION	BY	APPROVED	DATE
ORIGINAL	DPH	W. VALLE	11/17

CITY OF CHULA VISTA
ENGINEERING & CAPITAL PROJECTS
STANDARD DRAWING

CURB & SIDEWALK JOINT DETAILS

WILLIAM S. VALLE 11/21/2017
CITY ENGINEER

GSI-04

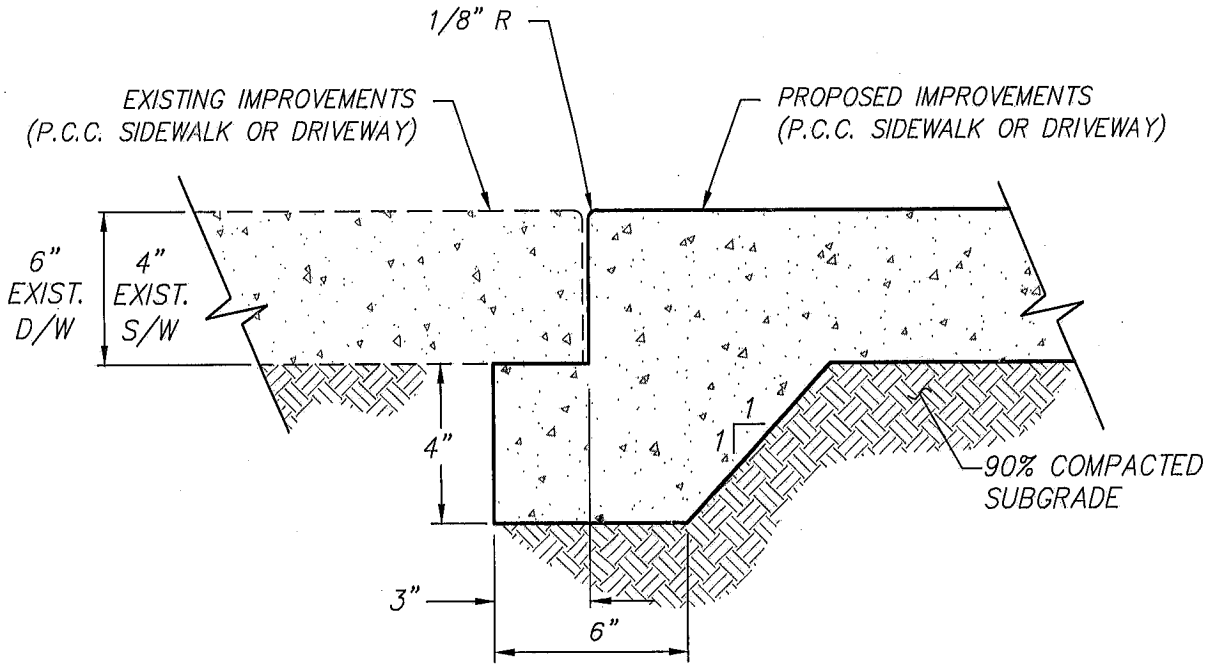

REVISION	BY	APPROVED	DATE
ORIGINAL	DPH	W. VALLE	11/17

CITY OF CHULA VISTA
ENGINEERING & CAPITAL PROJECTS
STANDARD DRAWING

SIDEWALK THICK EDGE AT DRIVEWAY

WILLIAM S. VALLE 11/21/2017
CITY ENGINEER

GSI-05

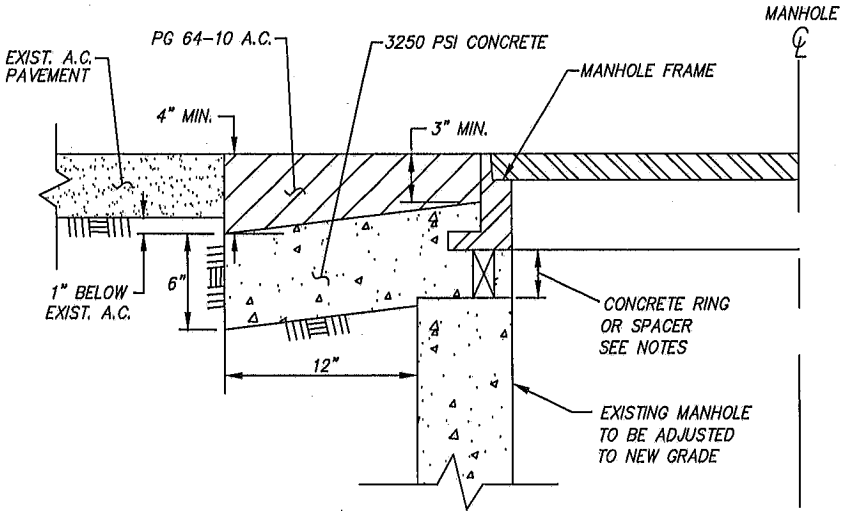

NOT TO SCALE

NOTES:

1. UNLESS OTHERWISE SPECIFIED, THE CONTRACTOR SHALL ADJUST ALL MANHOLE COVERS.

2. ALL COVERS SHALL BE SET 1/8" TO 1/4" HIGHER THAN THE FINISH GRADE. THE SETTING SHALL BE DONE ONLY AFTER THE ENGINEER HAS APPROVED THE PREPARED GRADE OF THE BASE MATERIAL. ALL BACKFILL SHALL BE WITH CRUSHED AGGREGATE BASE (PER SECTION 200-2.2) COMPACTED TO 95% RELATIVE DENSITY PER SECTION 211 OF THE STANDARD SPECIFICATIONS FOR FOR PUBLIC WORKS CONSTRUCTION. THE STREET SECTION SHALL BE REPLACED PER SECTION 306-1.1.5 EXCEPT A MINIMUM OF FOUR (4) INCHES OF ASPHALT CONCRETE WILL BE REQUIRED.

3. AT THE DISCRETION OF THE ENGINEER, MANHOLE COVERS MAY BE SET TO FINAL GRADE AFTER PAVEMENT HAS BEEN COMPLETED. THE SUBGRADE BASE AND PAVEMENT SHALL BE NEATLY REMOVED A DISTANCE OF TWELVE (12) INCHES FROM THE EDGE OF COVER. ALL SPOILS SHALL BE REMOVED FROM THE SITE. COVERS SHALL BE SET 1/8 OF AN INCH TO 1/4 OF AN INCH HIGHER THAN THE FINISH GRADE. ALL BACKFILL SHALL BE WITH CLASS AGGREGATE BASE.

4. ASPHALT CONCRETE SHALL BE PLACED AND COMPACTED IN TWO LAYERS: A BASE COURSE AND A SURFACE COURSE. SURFACE COURSE SHALL BE ONE (1) INCH THICK.

5. FOR ADJUSTMENT OVER 3-INCHES, USE A PRE-CAST GRADE RING.

6. FOR ADJUSTMENT 3-INCHES OR LESS, USE 3 (MIN) EVENLY SPACED CONCRETE BLOCKS OR SPACERS FOR CONCRETE TO FLOW UNDER MANHOLE FRAME. INSIDE OF MANHOLE SHALL BE FORMED TO RETAIN CONCRETE.

REVISION	BY	APPROVED	DATE
ORIGINAL	DPH	W. VALLE	11/17

CITY OF CHULA VISTA
ENGINEERING & CAPITAL PROJECTS
STANDARD DRAWING

MANHOLE ADJUSTMENT

WILLIAM S. VALLE 11/21/2017
CITY ENGINEER

GSI-06

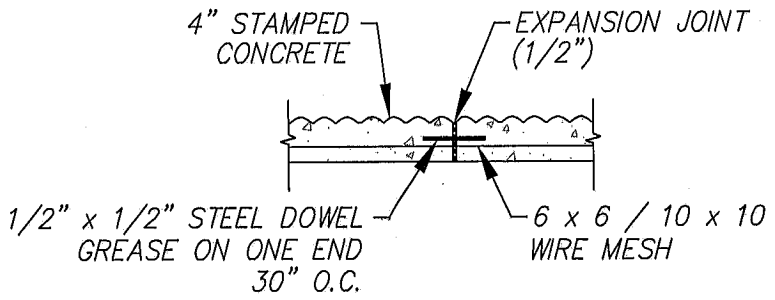

STEEL DOWEL WITH EXPANSION JOINT

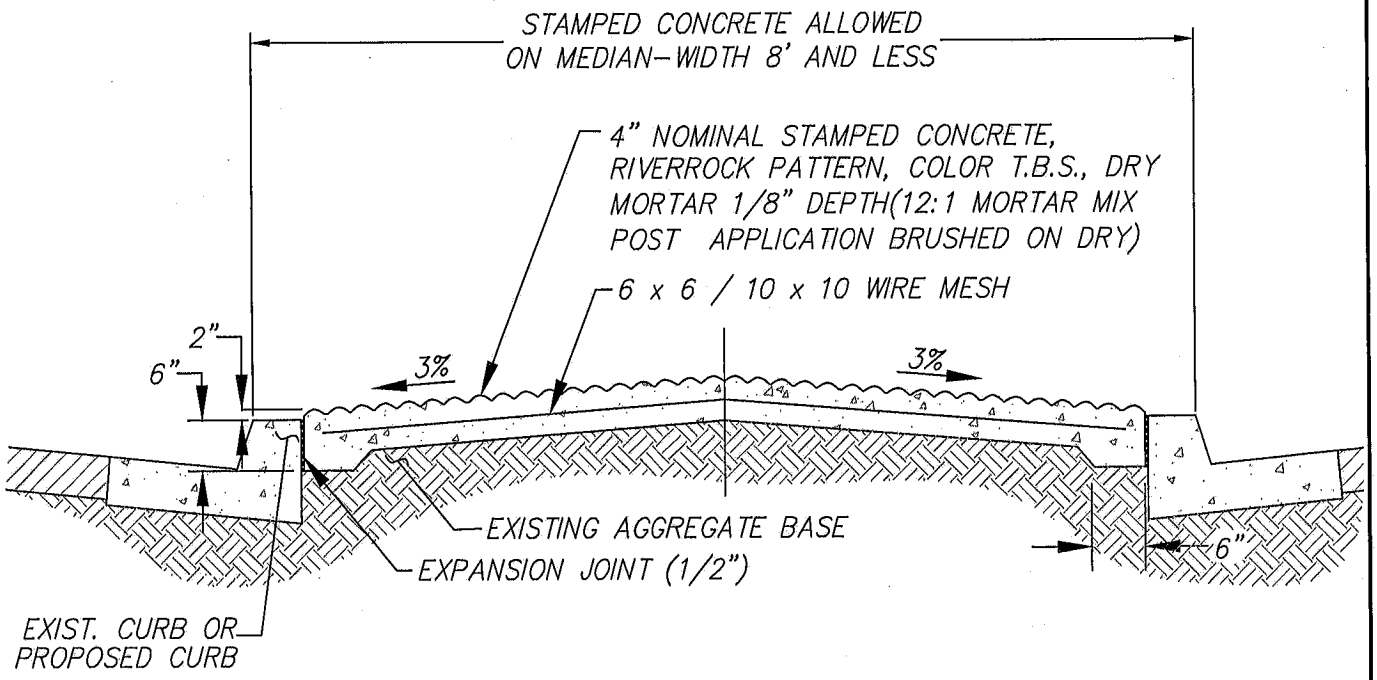

REVISION	BY	APPROVED	DATE
ORIGINAL	DPH	W. VALLE	11/17

CITY OF CHULA VISTA
ENGINEERING & CAPITAL PROJECTS
STANDARD DRAWING

STAMPED CONCRETE

WILLIAM S. VALLE 11/21/2017
CITY ENGINEER

GSI–7

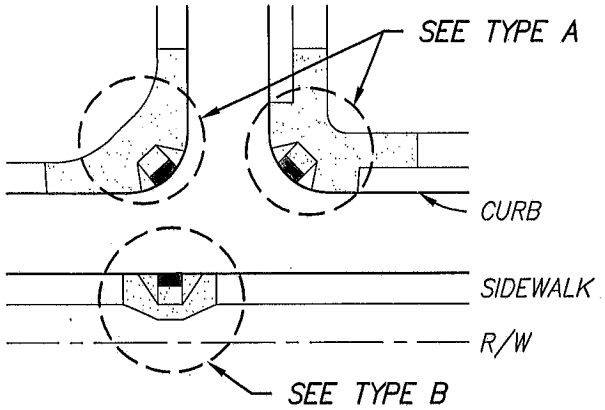

NOTES:

1. SEE DRAWING STANDARDS SSM FOR GENERAL NOTES.
2. FOR TRUNCATED DOMES DETAILS, PLEASE SEE SHEET 5
3. LANDING CROSS SLOPE AND LONGITUDINAL SLOPE SHALL BE 2% MAX.
4. Z SIDE SLOPE SHALL BE 10:1 MAX.

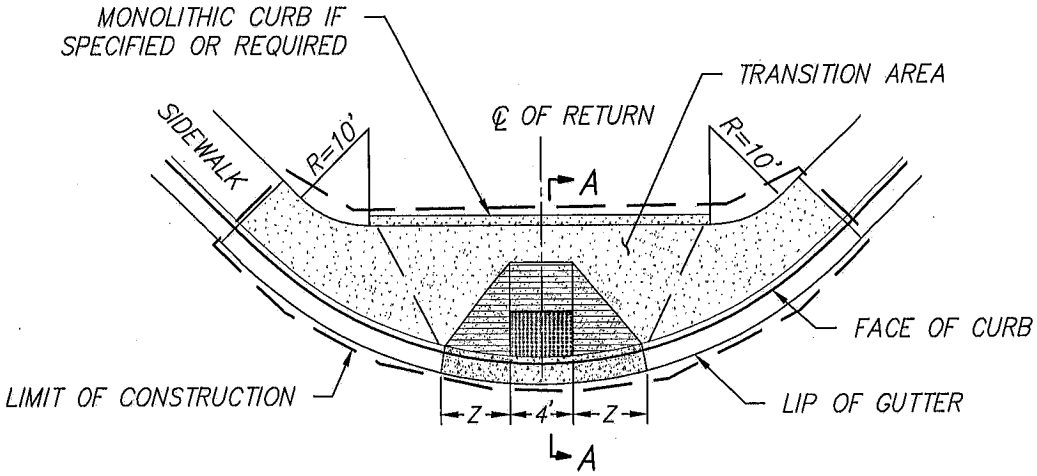

PLAN – TYPE A

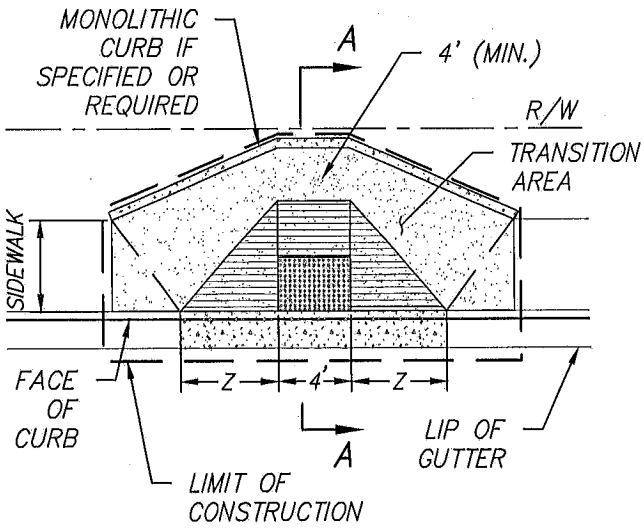

PLAN–TYPE B

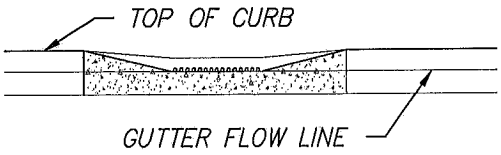

ELEVATION

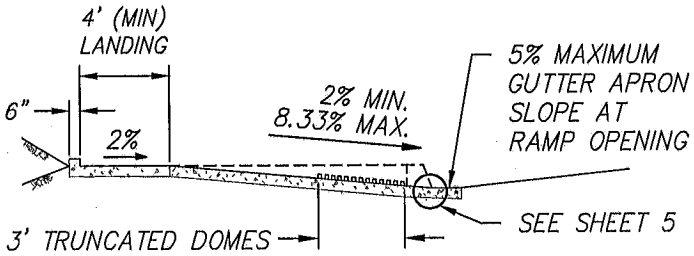

SECTION A–A

SHEET 1 OF 6

REVISION	BY	APPROVED	DATE
ORIGINAL			3/94
REVISION	CVM	C. SWANSON	11/02
REVISION	DPH	W. VALLE	11/17

CITY OF CHULA VISTA
ENGINEERING & CAPITAL PROJECTS
STANDARD DRAWING

CURB RAMP TYPES A & B – NEW CONSTRUCTION

WILLIAM S. VALLE 11/21/2017
CITY ENGINEER

GSI–08

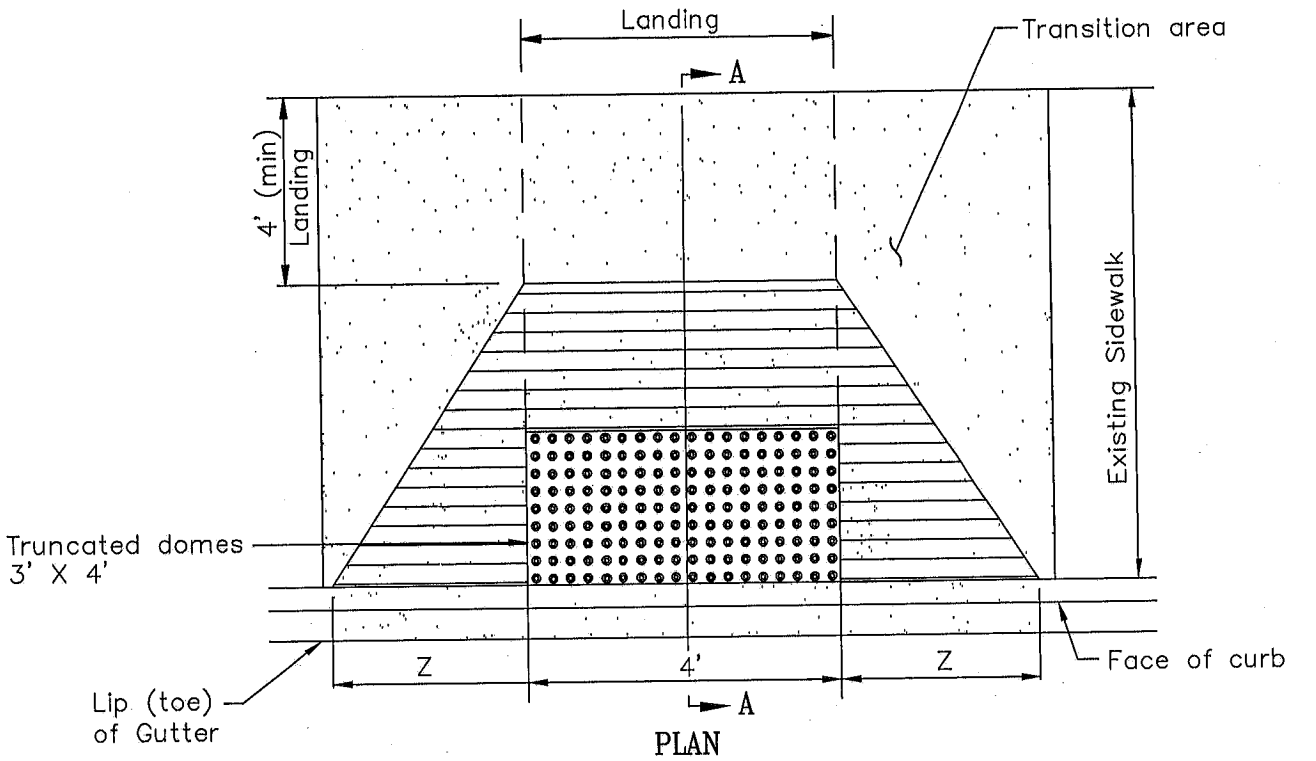

PLAN

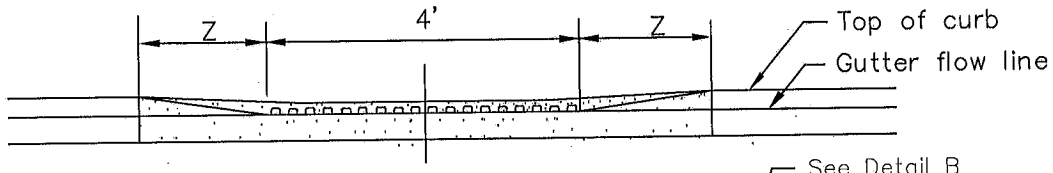

ELEVATION

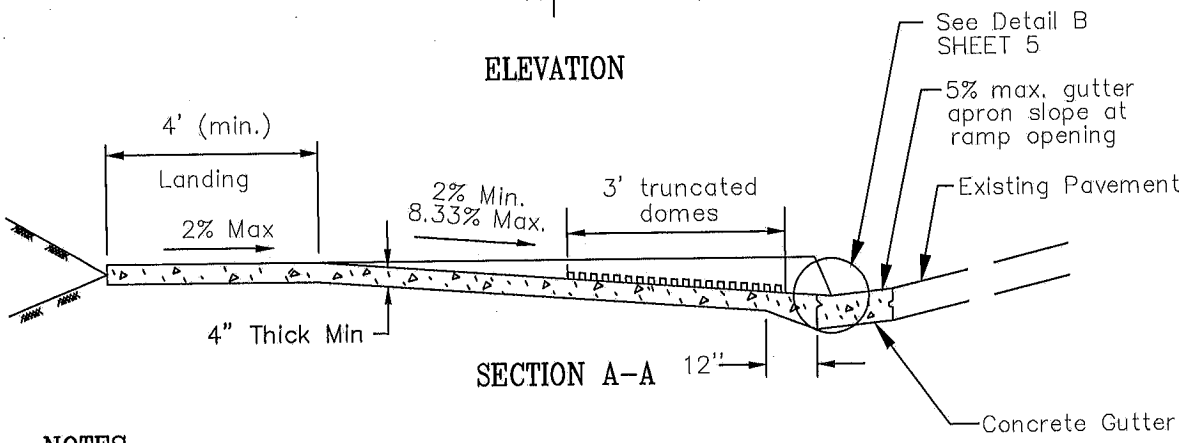

SECTION A–A

NOTES

1. See Standard Drawing CVCS–29 for general notes.
2. Type A–1 is a designation for ramp at curb return.
3. Type B–1 is a designation for ramp at straight curb (shown above).
4. Landing cross slope and longitudinal slope shall be 2% max.
5. For truncated domes details, please see sheet 5.
6. Z side slope shall be 10:1 max.

SHEET 2 OF 6

REVISION	BY	APPROVED	DATE
ORIGINAL			3/94
REVISION	CVM	C. SWANSON	11/02
REVISION	DPH	W. VALLE	11/17

CITY OF CHULA VISTA
ENGINEERING & CAPITAL PROJECTS
STANDARD DRAWING

CURB RAMP TYPE A1 B1 –
EXISTING SIDEWALK

WILLIAM S. VALLE 11/21/2017
CITY ENGINEER

GSI–08

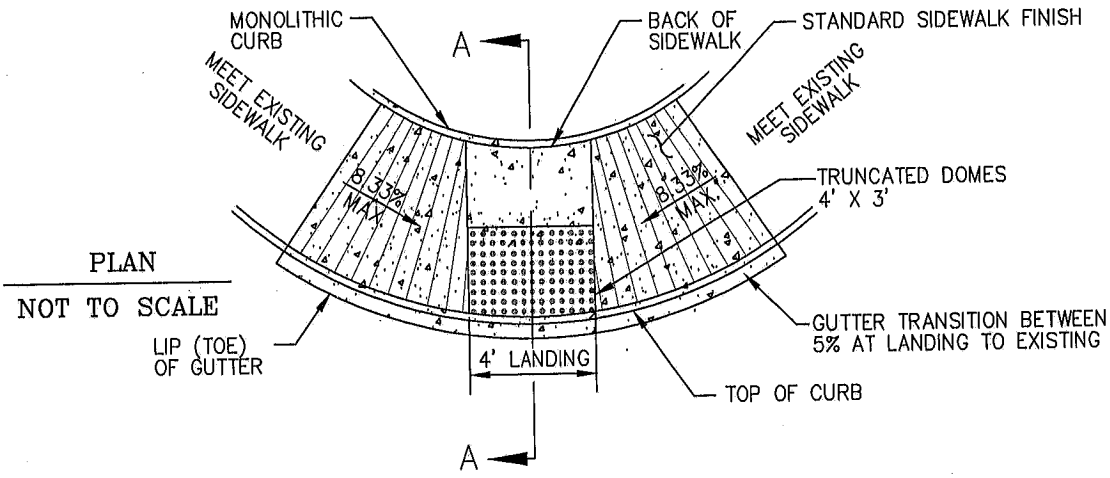

PLAN

NOT TO SCALE

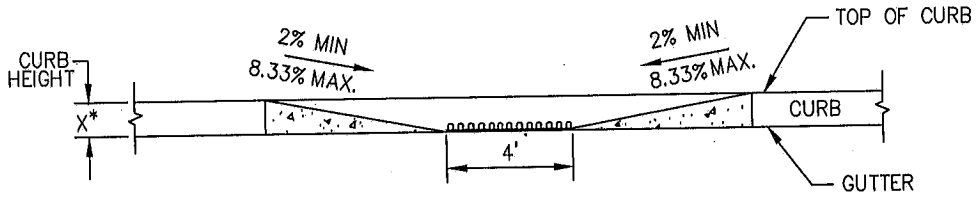

ELEVATION

NOT TO SCALE

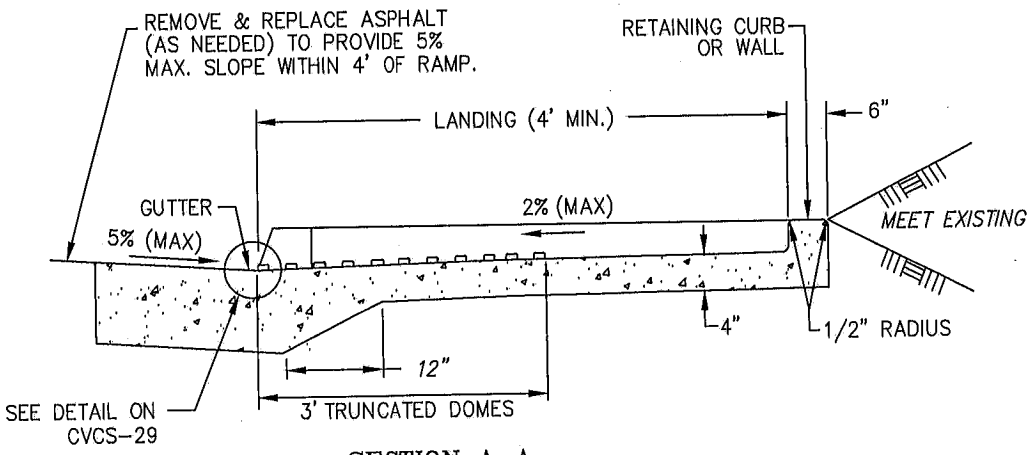

SECTION A–A

NOT TO SCALE

NOTES

1. Type C ramps are only to be used to mitigate conditions where inadequate right–of–way exists. Type C shall only be used with the approval of the City Engineer.
2. See CVCS–29 for General Notes.
3. Landing cross slope and longitudinal slope shall be 2% maximum.
4. For truncated domes, please see sheet 5
5. Sidewalk transition slope to landing shall be 8.33% maximum in all directions.

REVISION	BY	APPROVED	DATE
ORIGINAL			3/94
REVISION	CVM	C. SWANSON	11/02
REVISION	DPH	W. VALLE	11/17

CITY OF CHULA VISTA
ENGINEERING & CAPITAL PROJECTS
STANDARD DRAWING

CURB RAMP TYPE C

WILLIAM S. VALLE 11/21/2017
CITY ENGINEER

GSI–08

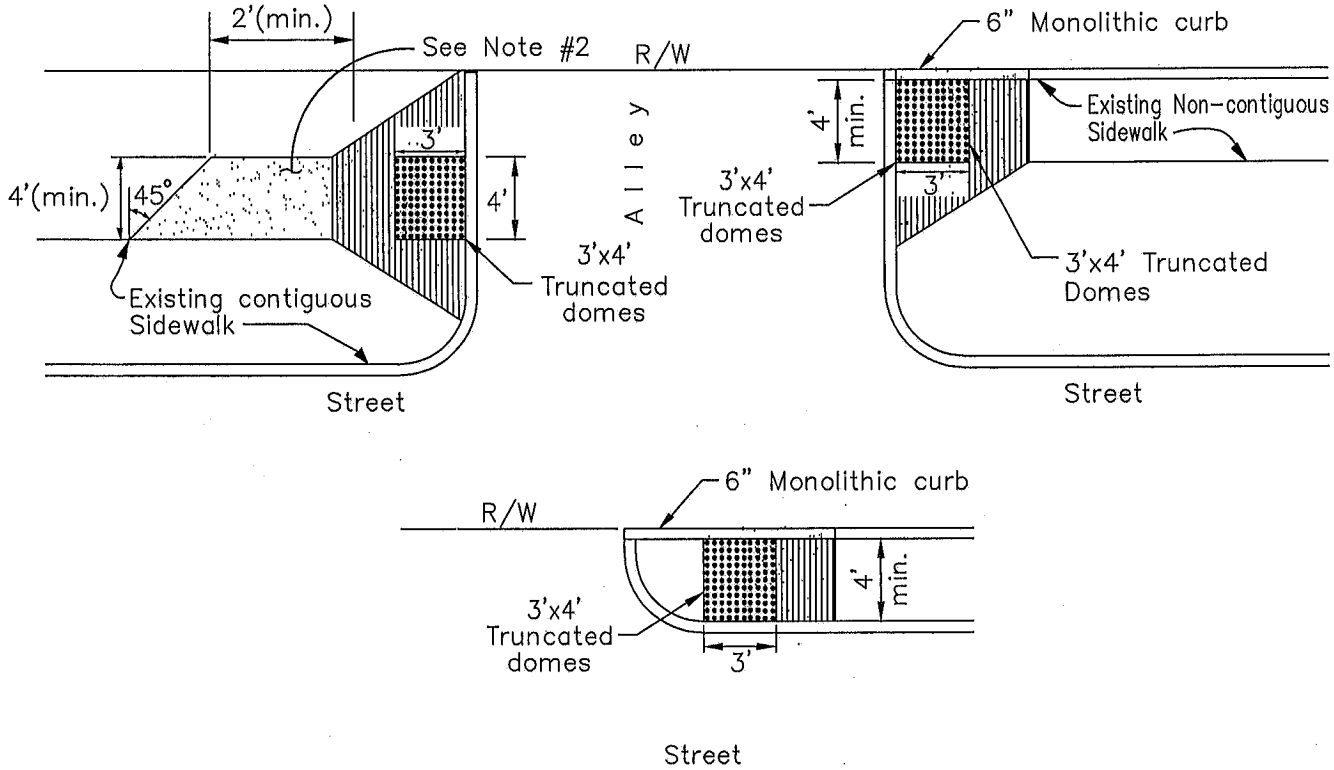

TYPICAL PLAN

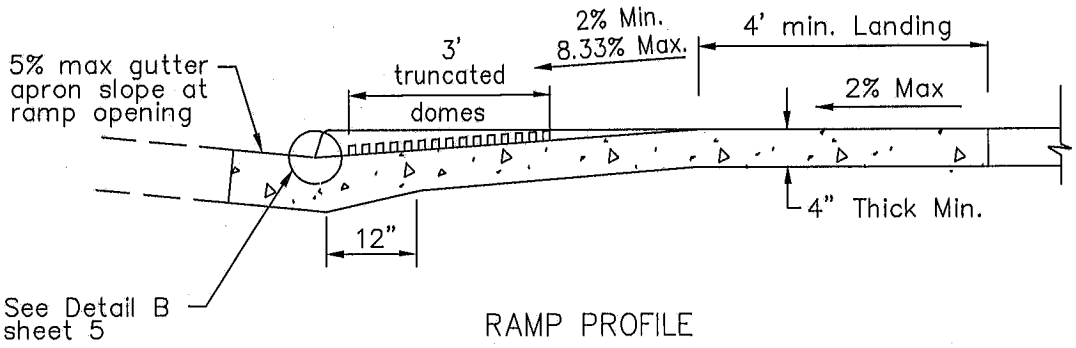

RAMP PROFILE

NOTES

1. See sheet 5 for additional details and general notes.
2. Landing cross slope and longitudinal slope shall be 2% max.
3. For truncated domes details, see sheet 6

SHEET 4 OF 6

REVISION	BY	APPROVED	DATE
ORIGINAL			3/94
REVISION	CVM	C. SWANSON	11/02
REVISION	DPH	W. VALLE	11/17

CITY OF CHULA VISTA
ENGINEERING & CAPITAL PROJECTS
STANDARD DRAWING

CURB RAMP TYPE D

WILLIAM S. VALLE 11/21/2017
CITY ENGINEER

GSI-08

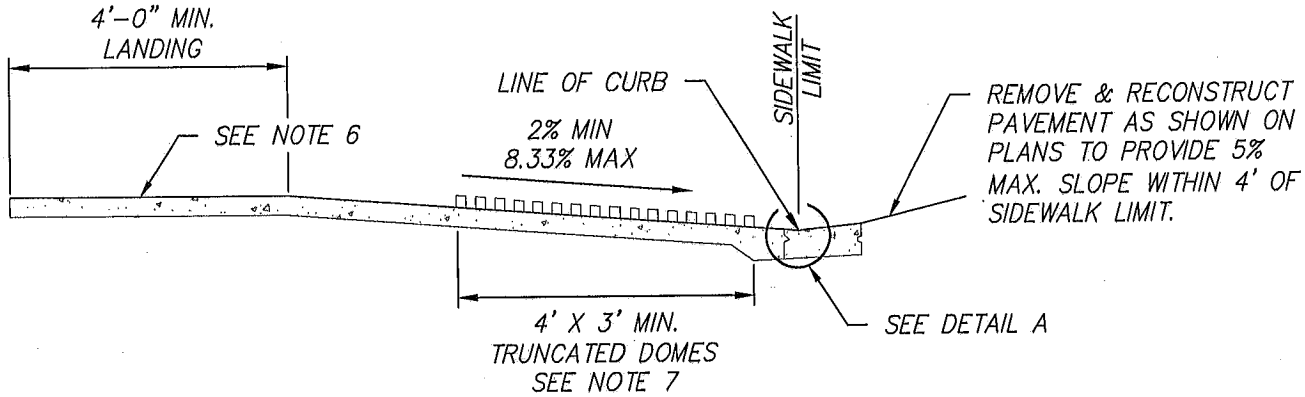

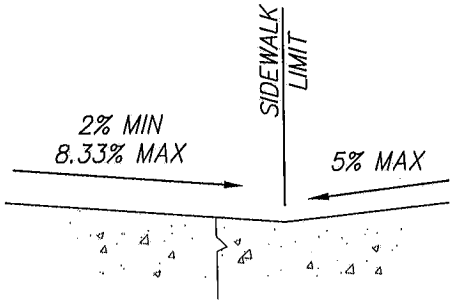

DETAIL A

NOT TO SCALE

NOTES

1. FOR CONSTRUCTION OF CURB RAMPS ON EXISTING SIDEWALKS, REMOVAL OF ADDITIONAL SIDEWALK MAYBE REQUIRED TO COMPLY WITH ADA REQUIREMENTS TO MEET THE EXISTING GRADE.
2. AREAS SHOWN THUS: SHALL HAVE A MEDIUM TO HEAVY BROOM TEXTURE FINISH, PERPENDICULAR TO THE AXIS OF THE RAMP.
3. AREAS SHOWN THUS: ARE THE MINIMUM REQUIRED FOR A COMPLETE RAMP INSTALLATION AND SHALL BE CONCRETE CLASS 520-C-2500.
4. IF OBSTRUCTIONS SUCH AS INLETS, UTILITY POLES, FIRE HYDRANTS, ETC., ARE ENCOUNTERED, THE RAMP LOCATIONS MAY BE ADJUSTED UPON THE APPROVAL OF THE RESIDENT ENGINEER OR AGENCY INSPECTOR. NO UTILITY BOX COVERS, GRATES, ETC. SHALL BE ALLOWED WITHIN THE RAMP AREA AND LANDING. 5. ADJOINING SLOPE BEYOND RAMP SHALL NOT EXCEED 20:1 (5%) WITHIN 4' OF SIDEWALK LIMIT WITH MAXIMUM OF 2% CROSS-SLOPE.
5. LANDING CROSS SLOPE AND LONGITUDINAL SLOPE SHALL BE 2% MAX EXCEPT AT MID-BLOCK CURB RAMPS.
6. ALL PROJECTS (NEW CONSTRUCTION & ALTERATION), THE LOWER END OF 48-INCH WIDTH OF THE RAMP SHALL BE FLUSH AND FREE OF ABRUPT CHANGES BETWEEN THE BOTTOM OF THE RAMP AND THE STREET PAVEMENT SURFACE.
7. THERE SHALL BE A MINIMUM OF 6-INCHES AND A MAXIMUM OF 8-INCHES SEPARATION BETWEEN THE FACE OF THE CURB AND ANY GIVEN POINT OF THE NEAREST EDGE OF THE TRUNCATED DOMES.
8. THE RAMP LONGITUDINAL SLOPE SHALL BE 2% MINIMUM AND 8.33% MAXIMUM. RAMP CROSS-SLOPE SHALL BE 2% MAXIMUM.
9. EXCEPTIONS MAY BE ALLOWED IN EXISTING CONSTRUCTION AND ALTERATIONS UPON CITY ENGINEER APPROVAL THAT FULL COMPLIANCE IS TECHNICALLY INFEASIBLE.
10. IF PEDESTRIAN PATH IS WIDER THAN 4', THE TRUNCATED DOMES WILL EXTEND THE ENTIRE WIDTH OF THE PATH.
11. DETECTABLE WARNINGS SHALL BE LOCATED SO THE EDGE NEAREST THE CURB IS 6" MIN AND 8" MAX FROM THE LINE AT THE FACE OF THE CURB MARKING THE TRANSITION BETWEEN THE CURB AND THE GUTTER, STREET OR HIGHWAY.

REVISION	BY	APPROVED	DATE
ORIGINAL			3/94
REVISION	CVM	C. SWANSON	11/02
REVISION	DPH	W. VALLE	11/17

CITY OF CHULA VISTA
ENGINEERING & CAPITAL PROJECTS
STANDARD DRAWING

CURB RAMP NOTES

WILLIAM S. VALLE 11/21/2017
CITY ENGINEER

GSI-08

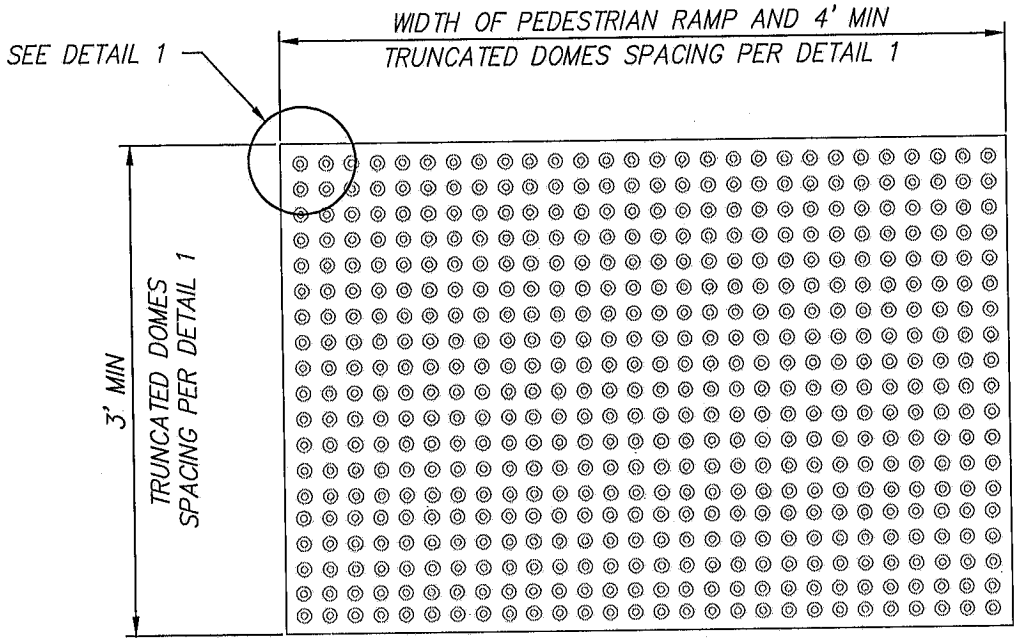

PLAN – TILE

NOT TO SCALE

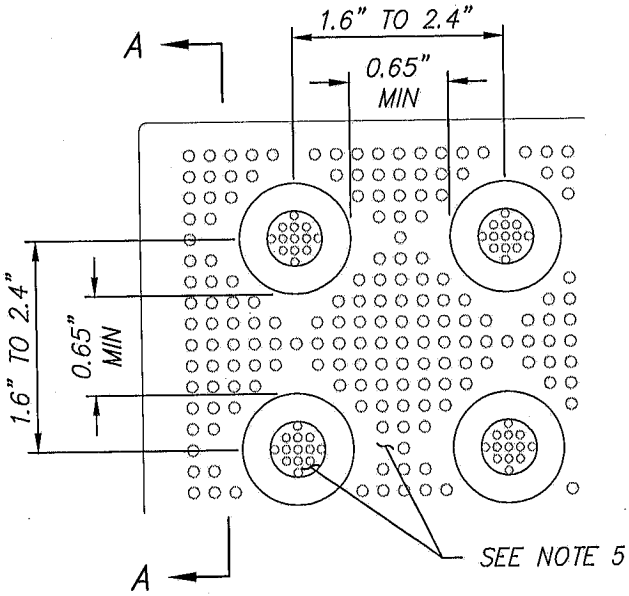

DETAIL 1

NOT TO SCALE

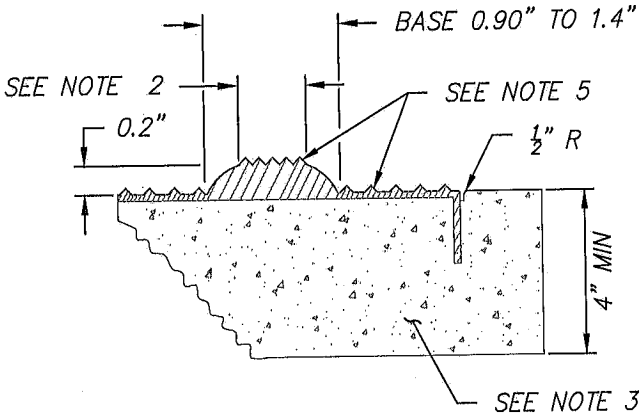

SECTION A–A

NOT TO SCALE

NOTES

1. DETECTABLE WARNING SURFACE COLOR SHALL BE YELLOW CONFORMING TO FEDERAL STANDARDS 595B TABLE IV, COLOR NO. 33538. COLOR SHALL BE HOMOGENEOUS THROUGHOUT THE TILE.
2. TRUNCATED DOME TOP DIAMETER OF 50% OF THE BASE DIAMETER MINIMUM TO 65% OF THE BASE DIAMETER MAXIMUM.
3. DURING AND AFTER THE TILE INSTALLATION AND THE CONCRETE CURING STAGE, IT IS IMPERATIVE THAT THERE IS NO WALKING, LEANING OR EXTERNAL FORCES PLACED ON THE TILE TO ROCK THE TILE, CAUSING A VOID BETWEEN THE UNDERSIDE OF TILE AND CONCRETE.
4. THE TRUNCATED DOME SHALL BE ARMOUR TILE OR AN APPROVED EQUIVALENT.
5. PATTERN, SIZE, ORIENTATION AND EMBEDMENT PER MANUFACTURER'S SPECIFICATIONS

SHEET 6 OF 6

REVISION	BY	APPROVED	DATE
ORIGINAL			3/94
REVISION	CVM	C. SWANSON	11/02
REVISION	DPH	W. VALLE	11/17

CITY OF CHULA VISTA
ENGINEERING & CAPITAL PROJECTS
STANDARD DRAWING

TRUNCATED DOMES

WILLIAM S. VALLE 11/21/2017
CITY ENGINEER

GSI–08