DRAINAGE STUDY
FOR
UNIVERSITY AND INNOVATION DISTRICT (UID)

(CONCEPTUAL)

Job Number 16693-A

September 17, 2015

RICK ENGINEERING COMPANY
ENGINEERING COMPANY
RICK ENGINEERING CO

RICK™
ENGINEERING COMPANY

DRAINAGE STUDY

FOR

UNIVERSITY AND INNOVATION DISTRICT (UID)

(CONCEPTUAL)

Job Number 16693-A

Brendan Hastie
R.C.E. #65809
Exp. 09/17

Prepared For:

HELIX Environmental Planning, Inc.
7578 El Cajon Boulevard, Suite 200
La Mesa, California 91942
(619) 462-1515

Prepared By:

Rick Engineering Company
Water Resources Division
5620 Friars Road
San Diego, California 92110-2596
(619) 291-0707

September 17, 2015

June 20, 2016

Mr. Tom Adler
City of Chula Vista
276 Fourth Avenue
Chula Vista, California 91910

SUBJECT: UNIVERSITY AND INNOVATION DISTRICT (UID) – CONCEPTUAL "PRIORITY DEVELOPMENT PROJECT STORM WATER QUALITY MANAGEMENT PLAN (PDP SWQMP)" (a.k.a. CONCEPTUAL WATER QUALITY TECHNICAL REPORT AND HYDROMODIFICATION MANAGEMENT PLAN)
(RICK ENGINEERING COMPANY JOB NUMBER 16693-A)

Dear Mr. Adler:

Pursuant to our discussion on March 3, 2016, this cover letter was prepared to supplement the following technical reports that were previously prepared:

- "Water Quality Technical Report for University and Innovation District (UID) (Conceptual)," dated September 17, 2015, prepared by Rick Engineering Company (herein referred to as the "WQTR")
- "Drainage Study for University and Innovation District (UID) (Conceptual)," dated September 17, 2015, prepared by Rick Engineering Company (herein referred to as the "Drainage Study")

The above referenced Conceptual WQTR (dated September 17, 2015) was previously prepared to address all the City of Chula Vista's outstanding review comments prior to the 2016 City of Chula Vista BMP Design Manual; therefore, the WQTR did not reflect the "format" of a Priority Development Project Storm Water Quality Management Plan (PDP SWQMP); however, it incorporated the anticipated design requirements based on the "2013 MS4" Permit (Order No. R9-2013-0001, as amended by Order Nos. R9-2015-0001 and R9-2015-0100).

In the above referenced WQTR, a total of five (5) "bioretention basins" (with subdrains and impermeable liners) were proposed that will serve as the primary stormwater management features for the project. These "bioretention basins" were designed to meet the intent of the "biofiltration BMP" design requirements in the 2013 MS4 Permit requirements (i.e. – pollutant control performance standard). The 2013 MS4 Permit requires Priority Development Projects (PDPs) to "retain" the design capture volume based on the 24-hour 85th percentile rainfall storm event (via Harvest and Use BMPs and/or Infiltration BMPs). If retention is determined to be technically infeasible, then the 2013 MS4 Permit allows the use of "Biofiltration BMPs" (with subdrain and impermeable liners). The retention design typically requires 36-hour drawdown time to be ready for "back-to-back storm". The project anticipates to use more drought-tolerant based plantings and the irrigation demand may not be sufficient to meet the drawdown time requirements. Secondly, based

on our current understanding of the site and a draft geotechnical investigation referenced in the WQTR, the majority of the project consists of Hydrologic Soil Type 'D" and infiltration is not anticipated to be feasible. Therefore, it is anticipated that the project will comply with the 2013 MS4 Permit requirements using "Biofiltration BMPs" (The "Biofiltration BMPs" would be equivalent to the "bioretention basins" with subdrains and impermeable liners). Minor adjustments may be necessary during future stages of design to reflect the requirements in the 2016 City of Chula Vista BMP Design Manual; however, the general BMP design approach/concept should not have to change significantly. Therefore, the five (5) "bioretention basins" (or "biofiltration BMPs") will continue to serve as the primary stormwater management features for the project.

In regards to hydromodification management plan (HMP) requirements (specific to flow control), major changes that took place in the 2013 MS4 Permit, as compared to the previous 2007 MS4 Permit, are that the "pre-project" condition is now based on the "pre-development" condition and the HMP exemption guidelines became more stringent. For the UID project, runoff from Phases I, II, and III of the project will be conveyed in a network of the proposed storm drain systems to proposed storm water management features for pollutant control and discharge directly to Otay River. Based on the approved San Diego Bay Watershed Management Area Water Quality Improvement Plan (WQIP), dated February 2016, a portion of Otay River is HMP exempt from the "Outfall to San Diego Bay" (downstream limit) to "Interstate 805" (upstream limit). The UID project will be situated upstream of the "Interstate 805"; however, it is our understanding that an additional HMP exemption study was prepared by an engineering consultant (reviewed by the City of San Diego) and submitted independently to the San Diego Regional Water Quality Control Board. The study recommends that hydromodification management exemption be reinstated for projects discharging runoff directly to the portion of Otay River from "Interstate 805" to "Lower Otay Reservoir Dam". Based on our conversation with the City of Chula Vista on March 3, 2016, it is anticipated that the above referenced HMP exemption study will be approved by the San Diego Regional Water Quality Control Board in the near future. Therefore, Phase I, II, and III of the project should continue to be exempt from the HMP requirements. If this exemption is not in place prior to final engineering for this project, the on-site BMPs will need to be upsized and/or additional BMPs will need to be implemented at that time.

In a similar fashion, runoff from Phase IV of the project will be conveyed in a network of storm drain systems towards the proposed storm water management features for pollutant control and discharges to Lower Otay Reservoir via a stabilized storm water conveyance system. Therefore, the Phase IV of the project should also continue to be exempt from the HMP requirements.

Lastly, in addition to the HMP flow control requirements, the project must consider the HMP sediment control pursuant to the 2013 MS4 Permit requirements. Based on the potential critical course sediment yield area (PCCSYA) map located in the San Diego Bay Watershed Management Area WQIP, it appears that a small portion of the project is identified as PCCSYA. However, this area is identified as "potential" only and it may require an additional analysis to determine if this area is considered truly critical to the downstream river/channel. The additional analysis can be performed during the future design stage (i.e. – preliminary engineering) to further assess the project's PCCSYA; however, this area is very small since the project is generally avoiding the steeper slopes surrounding the project area.

In conclusion, the WQTR, dated September 17, 2015, has incorporated adequate BMP design concepts in anticipation of the "2013 MS4" Permit (Order No. R9-2013-0001, as amended by Order Nos. R9-2015-0001 and R9-2015-0100). In the future, during preliminary engineering the WQTR will be replaced with a PDP SWQMP, specifically detailing the project permanent stormwater BMPs in accordance with the 2016 BMP Design Manual.

Please feel free to contact Nobu Murakami or myself if you have any questions and/or concerns at (619) 291-0707.

Sincerely,

RICK ENGINEERING COMPANY

Brendan C. Hastie
R.C.E. #65809, Exp. 09/17
Associate

BH:NM:vs:/files/text/16693-A.001

cc: Mr. Aaron Brownwood – HELIX Environmental Planning, Inc.
Ms. Karen Van Ert – Rick Engineering Company
Mr. John Goddard – Rick Engineering Company
Mr. Nobu Murakami – Rick Engineering Company

TABLE OF CONTENTS

1.0 Introduction 1
2.0 Hydrology 4
3.0 Hydraulics 11
4.0 Conclusion 14

Figures:
Figure 1: Vicinity Map 3

Tables:
Table 2-1: Summary of Hydrologic Results 6
Table 2-2: Summary of Off-site Hydrologic Information 8
Table 2-3: Summary of Hydrologic Results for Future Developed Site 9
Table 3-1: Summary of Energy Dissipater Sizes 12

Appendices:
Appendix A: Modified Rational Methods Analyses (100-year, 6-hour) [Pre-Project]
Appendix B: Modified Rational Methods Analyses (100-year, 6-hour) [Post-Project]
Appendix C: Hydrologic Supporting Materials
Appendix D: Storm Drain Design
Appendix E: Riprap Design
Appendix F: University and Innovation District: Relative Project Location Exhibit

Map Pockets:
Map Pocket 1: Drainage Study Map for University and Innovation District (UID) [Pre-Project]
Map Pocket 2: Drainage Study Map for University and Innovation District (UID) [Post-Project]

1.0 INTRODUCTION

1.1 Project Description

This conceptual drainage study presents hydrologic and hydraulic analyses for the proposed University and Innovation District (UID) project (herein referred to as "the project") in support of conceptual grading study. The project will be constructed in four (4) Phases: Phase I, Phase II, Phase III, and Phase IV. Phases I, II, and III of the project is bounded by Hunte Parkway and Otay Ranch Village 11 (ORV 11) to the north, Otay Ranch Village 9 (ORV 9) to the west, Otay Ranch Village 10 (ORV 10) and Otay River to the south, and Salt Creek to the east. Phase IV of the project is bounded by the United States Olympic Training Center to the north, Wueste Road and Lower Otay Reservoir (Lake) to the east and Salt Creek to the west. See Figure 1 for project location and map. The project is a mixed use development and proposes construction of educational facilities, commercial buildings, recreational facilities, office, and associated streets, parking lots and infrastructure.

More specifically, the proposed project would implement campus development planned for the site in the Otay Ranch and Eastlake III General Development Plans (GDPs), as amended. Approximately 353.8 acres of the project site is contained within Planning Area 10 of Otay Ranch GDP, while approximately 30 acres occur on the Lake Property portion of the Eastlake III GDP. The proposed maximum development area for the UID is 10,066,200 square feet that would support a total of 34,000 people including a mix of students, faculty, staff, residents, and office/retail workers. The university land uses are assumed to include up to 20,000 full-time students and 6,000 university faculty and staff. Innovation uses would include a mix of office, laboratory, and retail uses to support up to 8,000 jobs. Residents on the site are anticipated to include up to 5,400 students and 2,000 employees. A total of 13,500 parking spaces would be provided at full build-out to support the proposed UID SPA Plan development.

1.2 Drainage Characteristics

The project consists of ten (10) major drainage basins: Basins 100, 200, 300, 400, 500, 600, 700, 1000, 1100, and 1200. For locations of these drainage basins, refer to Map Pockets 1 and 2 of this report. In the pre-project condition, runoff from Phase I and Phase II of the project (i.e. – Basins 100 and 200) sheet-flows in a southerly direction towards Otay River. Runoff from Phase III of the project (i.e. – Basins 300, 400, 500, 600, and 700) sheet-flows in a southeasterly direction towards Salt Creek, which flows in a southerly direction and confluences with Otay River. Runoff from Phase IV of the project (i.e. – Basins 1000, 1100, and 1200) sheet-flows in an easterly directions towards three (3) existing culvert crossings beneath Wueste Road and outlets into Lower Otay Reservoir.

In the post-project condition, the drainage characteristics are anticipated to remain similar as compared to the pre-project condition. Runoff from Phase I and Phase II will be conveyed in the southerly direction via a network of the on-site proposed storm drain systems, which will connect to the storm drain system planned for the Otay Ranch Village 10 (ORV 10) development and directly discharge into the Otay River. In support of the UID project, Rick Engineering Company coordinated with the engineers for the ORV 10 project (i.e. Hunsaker and Associates, Inc.) to ensure that the ORV 10 conveyance system was designed to accommodate build-out conditions for the area as contemplated in the Otay Ranch GDP, which includes the UID Phase I

and Phase II development. Runoff from Phase III will be conveyed in a southwesterly direction via a network of on-site proposed storm drain systems and a proposed storm drain system through an off-site easement that will outlet into a proposed storm water management feature (i.e. – bioretention basin) located northwest of the confluence of Salt Creek and Otay River and discharge directly into Otay River. Runoff from Phase IV will be conveyed in an easterly direction via a network of on-site proposed storm drain systems towards the proposed storm water management features (i.e. – bioretention basins) for Basins 1100 and 1200 (except Basin 1000 will be a self-treating area) and outlet into Lower Otay Reservoir via three (3) proposed culvert crossings in the future that will replace the three (3) existing culvert crossings beneath Wueste Road. See Appendix F for an exhibit displaying the relative location of each phase.

1.3 Hydrology and Hydraulics

Hydrology and hydraulics are discussed in detail in Section 2.0 and 3.0 of this report.

1.4 Water Quality and Hydromodification Management

Water Quality and Hydromodification Management Plan (HMP) requirements for the project are discussed in a separate report titled, "Conceptual Water Quality Technical Report and Hydromodification Management Plan for University and Innovation District (UID)," dated September 17, 2015, and prepared by Rick Engineering Company (J-16693-A).

Figure 1: Vicinity Map

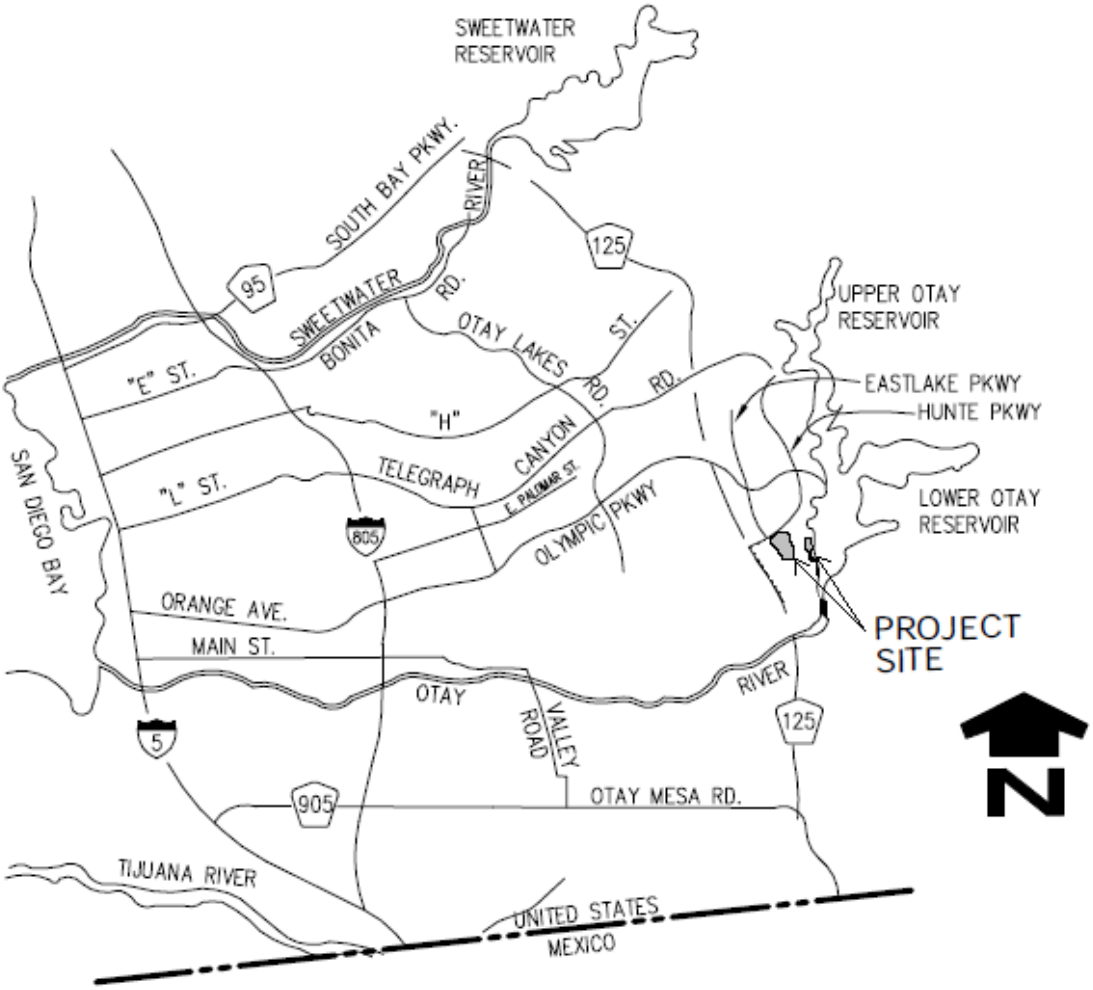

<u>Vicinity Map</u>
Not to Scale

2.0 HYDROLOGY

2.1 Methodology

The 100-year, 6-hour post-project flow rates have been computed using the Modified Rational Method. The hydrologic methodology utilized for the project has been taken from the San Diego County Hydrology Manual, dated June 2003. The Rational Method computer program developed by Advanced Engineering Software (AES 2003) was used for this study because it satisfies the County of San Diego's design criteria. Runoff coefficients used in the calculations were taken from the June 2003 San Diego County Hydrology Manual and were consistent with the March 2012 City of Chula Vista Subdivision Manual. Hydrologic analysis presented in this report is prepared in support of conceptual design; preliminary/final engineering design will be addressed in the future.

2.1.1 AES Rational Method Computer Model

The AES hydrologic model is developed by creating independent node-link models of each interior drainage basin, and linking these sub-models together at confluence points. The program has the capability to perform calculations for 15 hydrologic processes. These processes are assigned code numbers that appear in the results. The code number and their significance are as follows:

Subarea Hydrologic Processes (Codes)

Code 1:	Confluence analysis at node
Code 2:	Initial subarea analysis
Code 3:	Pipe flow travel time (computer-estimate pipe sizes)
Code 4:	Pipe flow travel time (user-specified pipe size)
Code 5:	Trapezoidal channel travel time
Code 6:	Street flow analysis through a subarea
Code 7:	User-specified information at a node
Code 8:	Addition of the subarea runoff to mainline
Code 9:	V-Gutter flow through subarea
Code 10:	Copy mainstream data onto memory bank
Code 11:	Confluence a memory bank with the mainstream memory
Code 12:	Clear a memory bank
Code 13:	Clear the mainstream memory
Code 14:	Copy a memory bank onto the mainstream memory
Code 15:	Hydrologic data bank storage functions

In order to perform the hydrologic analysis, base information for the entire study area is required. This information includes land uses, drainage facility locations, flow patterns, drainage basin boundaries and topographic elevations. The rainfall data, runoff coefficient, and soil information is based on the June 2003, County of San Diego Hydrology Manual, and copies of the corresponding backup data is included in Appendix C. The hydrologic calculations were analyzed using the following parameters:

2.2 Criteria

The hydrologic conditions were analyzed in accordance with the County of San Diego's design criteria as follows:

Design Storm:	100-year, 6-hour
Runoff Coefficients*:	
100% Impervious	C = 0.90
0% Impervious	C = 0.35 (for Soil Type 'D')
Soil Type**:	D
Rainfall Intensity:	Based on the 2003 San Diego County Hydrology Manual

* Weighted runoff coefficients were used where appropriate based on a percentage of 0.90 and 0.35.
** According to the United States Department of Agriculture (USDA) Natural Resources Conservation Service (NRCS) Web Soil Survey (http://websoilsurvey.sc.egov.usda.gov/App/WebSoilSurvey.aspx), the majority of the project consists of Hydrologic Soil Type 'D'.

2.3 Hydrologic Results

As discussed in Introduction of this report, ten (10) major drainage basins were identified for the project. The 100-year, 6-hour peak flow rates were determined at each of the major drainage basins. For location of each drainage basin, refer to the pre-project and post-project drainage study map in Map Pockets 1 and 2 of this report.

The on-site hydrologic results are summarized in Table 2-1 below, accompanied by a description and a summary of relevant off-site hydrologic information. The supporting Rational Method (AES 2003) outputs for the pre-project condition and post-project condition are provided in Appendix A and Appendix B, respectively. Also, based on the provided hydrologic results, a discussion is included at the end of this section to assess potential conditions of concern as a result of the project.

Table 2-1: Summary of Hydrologic Results

Point of Interest (POI)	Drainage Basin	Phase	Project Condition	Area, A (acres)	Weighted Runoff Coefficient, C_W	Time of Concentration, t_c (minutes)	Peak Flow Rate, Q_{100} (cfs [1])	ΔQ_{100} (cfs [1])
POI 1	100	Phase I	Pre	24.9	0.35	17.7	25.4	+306.2
			Post	75.3	0.85	7.3	331.6	
	200	Phase II	Pre [2]	166.5	0.35	14.9	240.1	+232.4
			Post [2]	137.7	0.85	9.2	472.5	
POI 2	300	Phase III	Pre [2]	116.2	0.35	27.0	89.4	+144.1
			Post [2]	80.9	0.85	11.9	233.5	
	400		Pre	29.7	0.35	11.7	39.5	+39.8
			Post	27.6	0.85	14.1	79.3	
	500		Pre	7.6	0.35	9.8	11.4	+15.5
			Post	5.8	0.85	6.7	26.9	
	600		Pre	8.2	0.35	10.9	11.4	+18.8
			Post	7.8	0.85	8.9	30.2	
	700		Pre [2]	404.0	0.35	14.4	982.5	n/a
			Post [3]	31.5	0.85	11.9	100.7	
POI 3	1000	Phase IV	Pre	4.8	0.35	11.2	6.7	-2.2
			Post	1.7	0.47	6.6	4.5	
	1100		Pre	12.3	0.36	10.6	14.4	+11.0
			Post	12.0	0.42	5.2	25.0	
	1200		Pre	4.5	0.35	10.5	6.5	+17.4
			Post	7.9	0.56	6.9	23.9	

Notes:

1. "cfs" - cubic feet per second
2. These drainage basins convey off-site flows. Refer to Table 2-2 for a summary of off-site source flows.
3. The off-site areas in the post-project condition was excluded since the majority flows coming from Phase III will now be conveyed in a southwesterly direction and will discharge directly into the Otay River near POI 2. In pre-project conditions, that portion of Phase III drained to the southeast into Salt Creek prior to being discharged into the Otay River near POI 2.

4. Off-Site Flow

In the existing condition, Basins 200, Basin 300 and Basin 700 receive off-site flows from northerly developments. Basin 200 receives off-site flow from a portion of existing ORV 11 and a portion of currently developed Millenia. Basin 300 receives off-site flow from "High Tech High" and its westerly adjacent slope. Basin 700 receives off-site flow from an easterly slope adjacent to High Tech High and another portion of ORV 11. Runoff in Basin 700 will be conveyed in an existing channel that is tributary to Salt Creek. The off-site hydrologic information was obtained from the following sources:

- Basin 200 – "TM Drainage Study for Otay Ranch Village 10," dated September 14, 2012, prepared by Hunsaker & Associates (W.O. 2825-03)
- Basin 300 – "Drainage Study High Tech High University Park Chula Vista Campus – Phase 2 (APN 643-070-10)," dated August 16, 2010, prepared by RBF Consulting
- Basin 700 – "Addendum to Rough Grading Hydrology Study for Otay Ranch Village 11 Phase 3," dated June 27, 2005, prepared by Hunsaker & Associates (W.O. 2366-22)

In the post-project condition, the project is anticipated to convey those off-site flows via the proposed storm drain systems. Phase II (i.e. – Basin 200) is anticipated to convey the same off-site flows from a portion of existing ORV 11 and a portion of currently developed Millenia (formerly known as the "Eastern Urban Center (EUC)"). Phase III (i.e. – Basin 300) is anticipated to convey flows from existing High Tech High site only since an existing slope located to the west is anticipated to be developed and become part of Phase II (i.e. – Basin 200); hence, there is a reduction of drainage area in Basin 300. An existing slope, located east of the existing High Tech High site, is anticipated to be developed and become part of Basin 300 and Basin 700 (Note: Basins 300, 400, 500, 600, and 700 will confluence and drain in a southerly direction via a network of the proposed storm drain systems). Lastly, the existing channel, located east of Phase III, is anticipated to convey the runoff from surrounding areas, including the same off-site flows from a portion of the existing Otay Ranch Village 11 development. However, since a majority of Basin 700 will be directed in a southerly direction and confluence with other drainage basins (i.e. – Basins 300, 400, 500, and 600), the tributary area to the existing channel will be reduced. A portion of Basin 700 will continue to drain into Salt Creek; however, since the overall tributary area to the creek will be reduced, the hydrologic analysis for the existing channel east of Phase III is not relevant.

Table 2-2 below summarizes relevant off-site hydrologic information.

Table 2-2: Summary of Off-site Hydrologic Information

Off-site Source Flows	Project Condition	Drainage Node #	Area, A (acres)	Time of Concentration, t_c (minutes)	Peak Flow Rate, Q_{100} (cfs [1])	ΔQ_{100} (cfs [1])
A portion of existing Otay Ranch Village 11 (including a portion of currently developed Millenia (EUC))	Pre-project	206	53.2	8.9	155	0
	Post-project	203	53.2	8.9	155	
Existing High Tech High and adjacent slope (west)	Pre-project	300	22.5	18.9	21	-13.6
	Post-project	303	11.0	18.0	7.4	
An existing slope, located east of existing High Tech High	Pre-project	703	4.7	13.8	7	n/a
	Post-project	N/A – This area is anticipated to be developed as part of the project and will be part of Basin 300 and Basin 700. Refer to the Basin 300 and Basin 700 hydrologic analyses.				
A portion of existing Otay Ranch Village 11	Pre-project	700	336.0	11.8	923	n/a
	Post-project	N/A – The same off-site flow is expected at this point in the post-project condition; however, a majority of Basin 700 will be conveyed in a southerly direction via a network of proposed storm drain system for Phase III; therefore, this off-site hydrologic analysis is not relevant.				

Notes:
1. "cfs" = cubic feet per second

In addition, an easterly portion of Basin 700 in the pre-project condition, located east of the existing channel may become a developed area in the future (currently there is a conceptual exhibit for San Diego Gas & Electric Substation for planning purposes only). It is acknowledged that the area is currently undeveloped; however, this area was assumed "developed" in the existing hydrologic analysis for Basin 700 due to the existence of the conceptual exhibit for the SDG&E Substation. This site was assigned separate drainage basin identification (i.e. – Basin 800A). Since this area was assumed to be developed during pre-project hydrologic conditions, hydrologic calculations would remain the same for post-project conditions. Table 2-3 below is a summary of the estimated hydrologic results. The supporting Rational Method calculation for this area is provided in Appendix A of this report.

Note: all the pre-project and post-project condition off-site flows were modeled in AES Rational Method using a source flow code '7'.

Table 2-3: Summary of Hydrologic Results for Future Developed Site

Outfall	Description	Area, A (acres)	Runoff Coefficient, C	Time of Concentration, t_c (minutes)	Peak Flow Rate, Q_{100} (cfs [1])
800 A	Future Developed Site	9.2	0.85	7.4	39.7

Notes:
1. "cfs" = cubic feet per second

Evaluation of Potential Impacts to Downstream Conditions of Concern

As summarized in Table 2-1, the drainage basins are categorized into three (3) points of interest (POI): POI 1, POI 2, and POI 3. The reason for identifying the points of interest, in both the pre-project and post-project conditions, is to allow for fair evaluation of the potential downstream conditions of concern as a result of the project. From a hydrologic standpoint, these include consideration of capacity of downstream systems, diversion of drainage areas, and potential erosion associated with discharging concentrated runoff and/or increased peak flow rates. Each POI location is evaluated in more detail below.

POI 1

POI 1 is identified at approximately 650 feet downstream of the anticipated storm drain outfall into Otay River from the future ORV 10 development. This location was selected since runoff from Basins 100 and 200 will be conveyed in the ORV 10 storm drain systems. The contributing drainage areas to POI 1 are Basins 100 and 200 with approximately 191.4 acres in the pre-project condition and 213.0 acres in the post-project condition. There is a difference of 21.6 acres since a portion of the pre-project drainage area tributary to Basin 300 is anticipated to be part of the Phase II drainage area (i.e. – Basins 100 and 200). Runoff from this additional area currently sheet-flows within Basin 300 in a southeasterly direction and outlets into Salt Creek at approximately 2000 feet upstream from the mouth of Salt Creek. Salt Creek drains into Otay River; therefore, runoff from the additional area eventually reaches POI 1.

Therefore, there are no downstream conditions of concern related to potential diversion of drainage. Since the discharge location is within the lower portion of the Otay River, the increase to peak runoff rates is also not considered significant, as the increased runoff entering the lower portion of the Otay River would be conveyed downstream prior to the peak runoff within the overall Otay River Watershed reaching this lower portion of the river. With regards to potential erosion, the proposed storm drain system (to be constructed by ORV 10) will include an energy dissipater designed to reduce discharge velocities to non-erosive conditions.
Note: A discussion has been added in Section 3.1.3 addressing the hydrologic and hydraulic requirements for drainage infrastructure if it turns out that Phase I and/or II of the UID project are constructed prior to the ORV 10 project.

POI 2

POI 2 is identified at approximately 100 feet downstream of the anticipated storm drain outfall into Otay River from the Phase III development (this location is also near the mouth of Salt Creek). This location was selected since runoff from Basins 300, 400, 500, 600, and 700 is anticipated to reach this point. The contributing drainage areas to POI 2 are Basins 300, 400, 500, 600, and 700 with approximately 565.7 acres in the pre-project condition and 153.6 acres and the in the post-project condition. The main reason for this discrepancy is due to an inclusion of an off-site area for Basin 700 in the pre-project condition. The majority of the 565.7 acres, including the off-site areas, sheet-flows in a southeasterly direction towards Salt Creek (off-site flows are conveyed via an existing channel tributary to Salt Creek) and eventually drains into Otay River, where POI 2 is located. The off-site areas in the post-project condition was excluded since runoff from Phase III (a majority of the areas that currently sheet-flows in a southeasterly direction towards Salt Creek) will be conveyed in a southwesterly direction and discharges directly into Otay River near POI 2. While the off-site areas in the post-project condition were excluded from Phase III, the areas will eventually reach POI 2. In summary, approximately the same drainage areas will reach POI 2.

Therefore, there are no downstream conditions of concern related to potential diversion of drainage. Since the discharge location is within the lower portion of the Otay River, the increase to peak runoff rates is also not considered significant, as the increased runoff entering the lower portion of the Otay River would be conveyed downstream prior to the peak runoff within the overall Otay River Watershed reaching this lower portion of the river. With regards to potential erosion, the proposed storm drain system (to be constructed by ORV 10) will include an energy dissipater designed to reduce discharge velocities to non-erosive conditions.

POI 3

POI 3 is the Lower Otay Reservoir since runoff from Basins 1000, 1100, and 1200 will discharge into the Lower Otay Reservoir. The project's contributing drainage areas to POI 3 are Basins 1000, 1100, and 1200 with approximately 21.6 acres in both the pre-project condition post-project condition. The storm drain system to convey runoff from Basins 1000, 1100, and 1200 to the Lower Otay Reservoir will be stabilized to the Lower Otay Reservoir.

Therefore, there are no downstream conditions of concern related to potential diversion of drainage. Since the discharge locations are conveyed directly to the Lower Otay Reservoir, the increase to peak runoff rates is also not considered significant, as the increased runoff entering the Lower Otay Reservoir would be stored as part of the overall water supply. With regards to potential erosion, the proposed storm drain systems conveying flow under Wueste Road will include an energy dissipater designed to reduce discharge velocities to non-erosive conditions, prior to conveyance directly into the Lower Otay Reservoir which provides energy dissipation based on the ponded water surface elevation.

In conclusion, based on the discussion provided above specific to POI 1, 2, and 3, there are no adverse impacts to downstream conditions of concern anticipated as a result of the project.

3.0 HYDRAULICS

3.1 Hydraulic Methodology and Criteria

The 100-year post-project peak flow rates determined using the Modified Rational Method were used to preliminarily size the on-site storm drain system and energy dissipaters. Hydraulic design presented in this section is in support of the main backbone storm drain system for Phase III and energy dissipater design at anticipated outfall locations. It is anticipated that project-specific detailed hydraulic design of the proposed storm drain systems and on-site inlets will be performed during final engineering design phase for the preparation of grading and improvement plans; therefore, those calculations are not included in this report.

3.1.1 Storm Drain Sizing

A network of on-site proposed storm drain system will be sized during the future design phases (i.e. – preliminary and final engineering). At this conceptual design level, the proposed backbone storm drain pipe for Phase III (i.e. – Basins 300, 400, 500, 600, and 700) via an off-site easement to the proposed storm water management feature located northwest of the Salt Creek and Otay River confluence was estimated using Manning's equation (normal depth). The 100-year peak flow rate to the storm drain pipe was estimated by the Modified Rational Method. Runoff from Phases I and II of the project (i.e. – Basins 100 and 200) will be conveyed through the proposed storm drain systems constructed as part of the future ORV 10 development. Please refer to the study titled, "Tentative Map Drainage Study for Otay Ranch Village 10," dated March 7, 2014, prepared by Hunsaker & Associates San Diego, Inc., for additional information regarding the ORV 10 project and these off-site storm drain systems.

<u>Storm Drain Results</u>

Pursuant to the conceptual grading study, the Phase III pad was graded at approximately 2% slope. Therefore, the proposed backbone storm drain system via an off-site easement has been estimated based on 2% slope. The normal depth calculation is included in Appendix D of this report. Based on the normal depth calculation, it is anticipated that the proposed storm drain system via the off-site easement will need to be a 72-inch reinforced concrete pipe (RCP) or equivalent.

3.1.2 Energy Dissipater Design

Energy dissipaters (i.e. ripraps) at the storm drain outfalls were specified using the San Diego Regional Standard Drawing ("D" Series) drawing number D-40, which provides rock classifications for design velocities entering riprap outfalls. At this conceptual level, the design velocity was estimated to be 17ft/s, 12ft/s and 13ft/s for Phase III, Phase IV (Basin 1100), and Phase IV (Basin 1200), respectively.

Energy Dissipater Results

The conceptual energy dissipater (i.e. – riprap) sizes are summarized in the Table 3-1 below. The dimensions of the energy dissipater specified below are anticipated to meet or exceed the requirements indicated on Drawing Number D-40 from the San Diego Regional Standard Drawings (2012). A copy of D-40 is provided for reference in Appendix E. More detailed hydraulic analyses of the energy dissipaters will take place during future design phases to ensure that the velocity of flow exiting the riprap pad will be a non-erosive velocity (i.e. – approximately 5 feet per second or less).

Table 3-1: Summary of Energy Dissipater Sizes

Outfall	Pipe Size [1] (inches)	Discharge, Q (cfs[2])	Exit Velocity [3] (feet/sec)	Energy Dissipater Size [3] (ton)	Anticipated Energy Dissipater Length (feet)	Width (feet)	Thickness (feet)
Phase III (Basins 300, 400, 500, 600 & 700)	72	422.0	17	2	35	48	5.4
Phase IV (Basin 1100)	24	19.5	12	1/4	20	16	2.7
Phase IV (Basin 1200)	30	30.8	13	1/2	20	20	3.5

Note:

1. The pipe sizes were estimated based on normal depth calculations. Detailed hydraulic calculations are anticipated during final engineering.
2. "cfs" = cubic feet per second
3. At the conceptual level, the exit velocity at each outfall was assumed as shown above. It is anticipated that the storm drain outfalls will be designed such that the exit velocity will not exceed these values. The proposed storm drain outfalls will be designed to dissipate energy and minimize potential erosion. Detailed calculations are anticipated during final engineering. Basin 100 and 200 storm drain outfalls to the same location as ORV 10, and riprap dissipaters are analyzed as a part of Otay Village 10 drainage study by Hunsaker and Associates.

3.2 Phasing of Drainage Infrastructure

It is important to note that Rick Engineering Company and the City of Chula Vista have coordinated with the engineer for the Otay Ranch Village 10 project (i.e. Hunsaker and Associates, Inc.) to ensure that the above referenced study has considered the drainage areas from Phase I and Phase II of the project for hydrologic and hydraulic calculations. At the authoring of this report, it is our understanding that the most current (latest) study for the ORV 10 project is titled "Tentative Map Drainage Study for Otay Ranch Village 10," dated March 7, 2014, prepared by Hunsaker & Associates San Diego, Inc.

In the event that the Otay Ranch Village (ORV) 10 project is not in place prior to or in conjunction with the development of Phase I and/or II for this project, a similar bioretention basin approach would be implemented within the project footprint during the initial phases as an interim BMP until the ultimate TC-BMP solutions are installed with ORV 10. A discussion has been included under "Design Standard TC-4" in Section 4.3 of the WQTR regarding this possibility, as it relates to water quality treatment.

With regards to drainage infrastructure, the temporary on-site basins would include temporary storm drain outfalls into the existing canyon areas along the southerly edge of the UID project boundary, within the development footprint (unless environmental approvals are in place to extend south of the project boundary), in order to mimic pre-project drainage boundaries. The temporary basins would be designed for both water quality volume and hydromodification management criteria since the existing tributaries between the project and the Otay River are not exempt from HMP criteria.

4.0 CONCLUSION

This conceptual drainage study presents the hydrologic and hydraulic analyses for the proposed University and Innovation District (UID) Project. The 100-year, 6-hour pre-project and post-project condition peak flow rates were determined using the Modified Rational Method based on the hydrologic methodology and criteria described in the County of San Diego Hydrology Manual, dated June 2003.

The 100-year, 6-hour post-project condition peak flow rates were determined to conceptually size the main backbone storm drain system for Phase III and IV and estimate energy dissipater sizes at anticipated outfall locations. The hydrologic and hydraulic designs presented in this report are conceptual; therefore, more detailed hydrologic and hydraulic designs are anticipated during site development and/or final engineering design phase for the preparation of grading and improvement plans. In general, the energy dissipaters will be located at major outlet/outfall locations, as shown on the Drainage Study Maps. The type and size of energy dissipaters will be specified during the final engineering phase design phase. Based on the hydrologic results and discussion provided in Section 2.0 of this report, it is anticipated that there are no adverse impacts to downstream conditions of concern anticipated as a result of the project.

Water quality and hydromodification management plan requirements are discussed in a separate report, titled "Water Quality Technical Report and Hydromodification Management Plan for University and Innovation District (UID)," dated September 17, 2015, prepared by Rick Engineering Company (J-16693-A).

APPENDIX A

Modified Rational Method Analyses (100-year, 6-hour)

[Pre-Project]

```
****************************************************************************

            RATIONAL METHOD HYDROLOGY COMPUTER PROGRAM PACKAGE
            Reference: SAN DIEGO COUNTY FLOOD CONTROL DISTRICT
                         2003,1985,1981 HYDROLOGY MANUAL
         (c) Copyright 1982-2003 Advanced Engineering Software (aes)
             Ver. 1.5A Release Date: 01/01/2003  License ID 1261

                          Analysis prepared by:

                        RICK ENGINEERING COMPANY
                            5620 Friars Road
                       San Diego, California 92110
                     619-291-0707   Fax 619-291-4165

 ************************** DESCRIPTION OF STUDY **************************
* UNIVERSITY PARK AND RESEARCH CENTER (UPRC); J-16693-A                    *
* BASIN 100; 100-YEAR, 6-HOUR                                              *
* PRE-PROJECT                                                              *
 ****************************************************************************

  FILE NAME: UP1HE00.RAT
  TIME/DATE OF STUDY: 10:44 12/17/2013
----------------------------------------------------------------------------
  USER SPECIFIED HYDROLOGY AND HYDRAULIC MODEL INFORMATION:
----------------------------------------------------------------------------
  2003 SAN DIEGO MANUAL CRITERIA

  USER SPECIFIED STORM EVENT(YEAR) = 100.00
  6-HOUR DURATION PRECIPITATION (INCHES) =   2.500
  SPECIFIED MINIMUM PIPE SIZE(INCH) =  18.00
  SPECIFIED PERCENT OF GRADIENTS(DECIMAL) TO USE FOR FRICTION SLOPE = 0.90
  SAN DIEGO HYDROLOGY MANUAL "C"-VALUES USED FOR RATIONAL METHOD
  NOTE: USE MODIFIED RATIONAL METHOD PROCEDURES FOR CONFLUENCE ANALYSIS
  *USER-DEFINED STREET-SECTIONS FOR COUPLED PIPEFLOW AND STREETFLOW MODEL*
     HALF-  CROWN TO   STREET-CROSSFALL:   CURB  GUTTER-GEOMETRIES:  MANNING
     WIDTH  CROSSFALL  IN-  / OUT-/PARK-  HEIGHT  WIDTH  LIP   HIKE  FACTOR
NO.   (FT)     (FT)    SIDE / SIDE/ WAY    (FT)    (FT)  (FT)  (FT)    (n)
===  =====  =========  =================  ======  ===== ====== ===== =======
  1   30.0     20.0    0.018/0.018/0.020   0.67    2.00 0.0313 0.167 0.0150

  GLOBAL STREET FLOW-DEPTH CONSTRAINTS:
    1. Relative Flow-Depth =  0.00 FEET
       as (Maximum Allowable Street Flow Depth) - (Top-of-Curb)
    2. (Depth)*(Velocity) Constraint =  6.0 (FT*FT/S)
  *SIZE PIPE WITH A FLOW CAPACITY GREATER THAN
   OR EQUAL TO THE UPSTREAM TRIBUTARY PIPE.*

****************************************************************************
  FLOW PROCESS FROM NODE    100.00 TO NODE    102.00 IS CODE =  21
----------------------------------------------------------------------------
  >>>>>RATIONAL METHOD INITIAL SUBAREA ANALYSIS<<<<<
============================================================================
  *USER SPECIFIED(SUBAREA):
  USER-SPECIFIED RUNOFF COEFFICIENT = .3500
  S.C.S. CURVE NUMBER (AMC II) =   0
  INITIAL SUBAREA FLOW-LENGTH(FEET) =   100.00
  UPSTREAM ELEVATION(FEET) =    566.00
  DOWNSTREAM ELEVATION(FEET) =    560.00
  ELEVATION DIFFERENCE(FEET) =      6.00
```

```
  SUBAREA OVERLAND TIME OF FLOW(MIN.) =     7.430
   100 YEAR RAINFALL INTENSITY(INCH/HOUR) =  5.102
  SUBAREA RUNOFF(CFS) =       0.36
  TOTAL AREA(ACRES) =       0.20   TOTAL RUNOFF(CFS) =       0.36

****************************************************************************
  FLOW PROCESS FROM NODE    102.00 TO NODE    104.00 IS CODE =  51
----------------------------------------------------------------------------
  >>>>>COMPUTE TRAPEZOIDAL CHANNEL FLOW<<<<<
  >>>>>TRAVELTIME THRU SUBAREA (EXISTING ELEMENT)<<<<<
============================================================================
  ELEVATION DATA: UPSTREAM(FEET) =    560.00  DOWNSTREAM(FEET) =    520.00
  CHANNEL LENGTH THRU SUBAREA(FEET) =   428.20   CHANNEL SLOPE =  0.0934
  CHANNEL BASE(FEET) =   15.00   "Z" FACTOR =   5.000
  MANNING'S FACTOR = 0.030   MAXIMUM DEPTH(FEET) =  10.00
   100 YEAR RAINFALL INTENSITY(INCH/HOUR) =  3.808
  *USER SPECIFIED(SUBAREA):
  USER-SPECIFIED RUNOFF COEFFICIENT = .3500
  S.C.S. CURVE NUMBER (AMC II) =   0
  TRAVEL TIME COMPUTED USING ESTIMATED FLOW(CFS) =       1.04
  TRAVEL TIME THRU SUBAREA BASED ON VELOCITY(FEET/SEC.) =   1.67
  AVERAGE FLOW DEPTH(FEET) =   0.04   TRAVEL TIME(MIN.) =   4.26
  Tc(MIN.) =  11.69
  SUBAREA AREA(ACRES) =     1.00       SUBAREA RUNOFF(CFS) =    1.33
  AREA-AVERAGE RUNOFF COEFFICIENT =  0.350
  TOTAL AREA(ACRES) =       1.20         PEAK FLOW RATE(CFS) =       1.60

  END OF SUBAREA CHANNEL FLOW HYDRAULICS:
  DEPTH(FEET) =  0.05   FLOW VELOCITY(FEET/SEC.) =   2.07
  LONGEST FLOWPATH FROM NODE    100.00 TO NODE    104.00 =   528.20 FEET.

****************************************************************************
  FLOW PROCESS FROM NODE    104.00 TO NODE    106.00 IS CODE =  51
----------------------------------------------------------------------------
  >>>>>COMPUTE TRAPEZOIDAL CHANNEL FLOW<<<<<
  >>>>>TRAVELTIME THRU SUBAREA (EXISTING ELEMENT)<<<<<
============================================================================
  ELEVATION DATA: UPSTREAM(FEET) =    520.00  DOWNSTREAM(FEET) =    500.00
  CHANNEL LENGTH THRU SUBAREA(FEET) =   162.20   CHANNEL SLOPE =  0.1233
  CHANNEL BASE(FEET) =   12.00   "Z" FACTOR =   5.000
  MANNING'S FACTOR = 0.030   MAXIMUM DEPTH(FEET) =  10.00
   100 YEAR RAINFALL INTENSITY(INCH/HOUR) =  3.627
  *USER SPECIFIED(SUBAREA):
  USER-SPECIFIED RUNOFF COEFFICIENT = .3500
  S.C.S. CURVE NUMBER (AMC II) =   0
  TRAVEL TIME COMPUTED USING ESTIMATED FLOW(CFS) =       2.68
  TRAVEL TIME THRU SUBAREA BASED ON VELOCITY(FEET/SEC.) =   2.95
  AVERAGE FLOW DEPTH(FEET) =   0.07   TRAVEL TIME(MIN.) =   0.92
  Tc(MIN.) =  12.61
  SUBAREA AREA(ACRES) =     1.70       SUBAREA RUNOFF(CFS) =    2.16
  AREA-AVERAGE RUNOFF COEFFICIENT =  0.350
  TOTAL AREA(ACRES) =       2.90         PEAK FLOW RATE(CFS) =       3.68

  END OF SUBAREA CHANNEL FLOW HYDRAULICS:
  DEPTH(FEET) =  0.09   FLOW VELOCITY(FEET/SEC.) =   3.34
  LONGEST FLOWPATH FROM NODE    100.00 TO NODE    106.00 =   690.40 FEET.

****************************************************************************
  FLOW PROCESS FROM NODE    106.00 TO NODE    110.00 IS CODE =  51
----------------------------------------------------------------------------
  >>>>>COMPUTE TRAPEZOIDAL CHANNEL FLOW<<<<<
```

```
>>>>>TRAVELTIME THRU SUBAREA (EXISTING ELEMENT)<<<<<
============================================================================
ELEVATION DATA: UPSTREAM(FEET) =    500.00  DOWNSTREAM(FEET) =    430.00
CHANNEL LENGTH THRU SUBAREA(FEET) =   736.50   CHANNEL SLOPE =  0.0950
CHANNEL BASE(FEET) =   18.00   "Z" FACTOR =   7.000
MANNING'S FACTOR = 0.030   MAXIMUM DEPTH(FEET) =  10.00
 100 YEAR RAINFALL INTENSITY(INCH/HOUR) =  3.151
*USER SPECIFIED(SUBAREA):
USER-SPECIFIED RUNOFF COEFFICIENT = .3500
S.C.S. CURVE NUMBER (AMC II) =   0
TRAVEL TIME COMPUTED USING ESTIMATED FLOW(CFS) =     10.16
TRAVEL TIME THRU SUBAREA BASED ON VELOCITY(FEET/SEC.) =   3.99
AVERAGE FLOW DEPTH(FEET) =   0.13   TRAVEL TIME(MIN.) =   3.08
Tc(MIN.) =  15.69
SUBAREA AREA(ACRES) =    11.70       SUBAREA RUNOFF(CFS) =   12.90
AREA-AVERAGE RUNOFF COEFFICIENT =  0.350
TOTAL AREA(ACRES) =     14.60         PEAK FLOW RATE(CFS) =      16.10

END OF SUBAREA CHANNEL FLOW HYDRAULICS:
DEPTH(FEET) =  0.18   FLOW VELOCITY(FEET/SEC.) =   4.64
LONGEST FLOWPATH FROM NODE    100.00 TO NODE    110.00 =  1426.90 FEET.

****************************************************************************
FLOW PROCESS FROM NODE    110.00 TO NODE    112.00 IS CODE =  51
----------------------------------------------------------------------------
>>>>>COMPUTE TRAPEZOIDAL CHANNEL FLOW<<<<<
>>>>>TRAVELTIME THRU SUBAREA (EXISTING ELEMENT)<<<<<
============================================================================
ELEVATION DATA: UPSTREAM(FEET) =    430.00  DOWNSTREAM(FEET) =    384.00
CHANNEL LENGTH THRU SUBAREA(FEET) =   637.30   CHANNEL SLOPE =  0.0722
CHANNEL BASE(FEET) =   13.00   "Z" FACTOR =   6.500
MANNING'S FACTOR = 0.030   MAXIMUM DEPTH(FEET) =  10.00
 100 YEAR RAINFALL INTENSITY(INCH/HOUR) =  2.911
*USER SPECIFIED(SUBAREA):
USER-SPECIFIED RUNOFF COEFFICIENT = .3500
S.C.S. CURVE NUMBER (AMC II) =   0
TRAVEL TIME COMPUTED USING ESTIMATED FLOW(CFS) =     21.35
TRAVEL TIME THRU SUBAREA BASED ON VELOCITY(FEET/SEC.) =   5.20
AVERAGE FLOW DEPTH(FEET) =   0.28   TRAVEL TIME(MIN.) =   2.04
Tc(MIN.) =  17.73
SUBAREA AREA(ACRES) =    10.30       SUBAREA RUNOFF(CFS) =   10.50
AREA-AVERAGE RUNOFF COEFFICIENT =  0.350
TOTAL AREA(ACRES) =     24.90         PEAK FLOW RATE(CFS) =      25.37

END OF SUBAREA CHANNEL FLOW HYDRAULICS:
DEPTH(FEET) =  0.31   FLOW VELOCITY(FEET/SEC.) =   5.49
LONGEST FLOWPATH FROM NODE    100.00 TO NODE    112.00 =  2064.20 FEET.
============================================================================
END OF STUDY SUMMARY:
TOTAL AREA(ACRES)      =     24.90  TC(MIN.) =     17.73
PEAK FLOW RATE(CFS)    =     25.37
============================================================================
============================================================================
END OF RATIONAL METHOD ANALYSIS
```

```
****************************************************************************

            RATIONAL METHOD HYDROLOGY COMPUTER PROGRAM PACKAGE
            Reference: SAN DIEGO COUNTY FLOOD CONTROL DISTRICT
                         2003,1985,1981 HYDROLOGY MANUAL
         (c) Copyright 1982-2003 Advanced Engineering Software (aes)
             Ver. 1.5A Release Date: 01/01/2003  License ID 1261

                          Analysis prepared by:

                        RICK ENGINEERING COMPANY
                            5620 Friars Road
                       San Diego, California 92110
                     619-291-0707   Fax 619-291-4165

 ************************** DESCRIPTION OF STUDY **************************
* UNIVERSITY PARK AND RESEARCH CENTER (UPRC); J-16693-A                    *
* BASIN 200; 100-YEAR, 6-HOUR                                              *
* PRE-PROJECT                                                              *
 ***************************************************************************

  FILE NAME: UP2HE00.RAT
  TIME/DATE OF STUDY: 10:45 12/17/2013
----------------------------------------------------------------------------
  USER SPECIFIED HYDROLOGY AND HYDRAULIC MODEL INFORMATION:
----------------------------------------------------------------------------
  2003 SAN DIEGO MANUAL CRITERIA

  USER SPECIFIED STORM EVENT(YEAR) = 100.00
  6-HOUR DURATION PRECIPITATION (INCHES) =   2.500
  SPECIFIED MINIMUM PIPE SIZE(INCH) =  18.00
  SPECIFIED PERCENT OF GRADIENTS(DECIMAL) TO USE FOR FRICTION SLOPE = 0.90
  SAN DIEGO HYDROLOGY MANUAL "C"-VALUES USED FOR RATIONAL METHOD
  NOTE: USE MODIFIED RATIONAL METHOD PROCEDURES FOR CONFLUENCE ANALYSIS
  *USER-DEFINED STREET-SECTIONS FOR COUPLED PIPEFLOW AND STREETFLOW MODEL*
     HALF-  CROWN TO   STREET-CROSSFALL:   CURB  GUTTER-GEOMETRIES:  MANNING
     WIDTH  CROSSFALL  IN-  / OUT-/PARK-  HEIGHT  WIDTH  LIP   HIKE  FACTOR
NO.   (FT)     (FT)    SIDE / SIDE/ WAY    (FT)    (FT)  (FT)  (FT)    (n)
===  =====  =========  =================  ======  ===== ====== ===== =======
  1   30.0     20.0    0.018/0.018/0.020   0.67    2.00 0.0313 0.167 0.0150

  GLOBAL STREET FLOW-DEPTH CONSTRAINTS:
    1. Relative Flow-Depth =  0.00 FEET
       as (Maximum Allowable Street Flow Depth) - (Top-of-Curb)
    2. (Depth)*(Velocity) Constraint =  6.0 (FT*FT/S)
  *SIZE PIPE WITH A FLOW CAPACITY GREATER THAN
   OR EQUAL TO THE UPSTREAM TRIBUTARY PIPE.*

****************************************************************************
  FLOW PROCESS FROM NODE    200.00 TO NODE    202.00 IS CODE =  21
----------------------------------------------------------------------------
  >>>>>RATIONAL METHOD INITIAL SUBAREA ANALYSIS<<<<<
============================================================================
  *USER SPECIFIED(SUBAREA):
  USER-SPECIFIED RUNOFF COEFFICIENT = .3500
  S.C.S. CURVE NUMBER (AMC II) =   0
  INITIAL SUBAREA FLOW-LENGTH(FEET) =    85.20
  UPSTREAM ELEVATION(FEET) =    609.00
  DOWNSTREAM ELEVATION(FEET) =    604.00
  ELEVATION DIFFERENCE(FEET) =      5.00
```

```
  SUBAREA OVERLAND TIME OF FLOW(MIN.) =     6.909
   100 YEAR RAINFALL INTENSITY(INCH/HOUR) =  5.347
  SUBAREA RUNOFF(CFS) =       0.37
  TOTAL AREA(ACRES) =       0.20   TOTAL RUNOFF(CFS) =       0.37

****************************************************************************
  FLOW PROCESS FROM NODE    202.00 TO NODE    204.00 IS CODE =  51
----------------------------------------------------------------------------
  >>>>>COMPUTE TRAPEZOIDAL CHANNEL FLOW<<<<<
  >>>>>TRAVELTIME THRU SUBAREA (EXISTING ELEMENT)<<<<<
============================================================================
  ELEVATION DATA: UPSTREAM(FEET) =    604.00  DOWNSTREAM(FEET) =    480.00
  CHANNEL LENGTH THRU SUBAREA(FEET) =  1037.70   CHANNEL SLOPE =  0.1195
  CHANNEL BASE(FEET) =   15.00   "Z" FACTOR =   5.000
  MANNING'S FACTOR = 0.030   MAXIMUM DEPTH(FEET) =  10.00
   100 YEAR RAINFALL INTENSITY(INCH/HOUR) =  4.048
  *USER SPECIFIED(SUBAREA):
  USER-SPECIFIED RUNOFF COEFFICIENT = .3500
  S.C.S. CURVE NUMBER (AMC II) =   0
  TRAVEL TIME COMPUTED USING ESTIMATED FLOW(CFS) =     10.36
  TRAVEL TIME THRU SUBAREA BASED ON VELOCITY(FEET/SEC.) =   4.64
  AVERAGE FLOW DEPTH(FEET) =   0.14   TRAVEL TIME(MIN.) =   3.73
  Tc(MIN.) =  10.64
  SUBAREA AREA(ACRES) =    13.90       SUBAREA RUNOFF(CFS) =   19.69
  AREA-AVERAGE RUNOFF COEFFICIENT =  0.350
  TOTAL AREA(ACRES) =     14.10         PEAK FLOW RATE(CFS) =      19.98

  END OF SUBAREA CHANNEL FLOW HYDRAULICS:
  DEPTH(FEET) =  0.21   FLOW VELOCITY(FEET/SEC.) =   5.90
  LONGEST FLOWPATH FROM NODE    200.00 TO NODE    204.00 =  1122.90 FEET.

****************************************************************************
  FLOW PROCESS FROM NODE    204.00 TO NODE    210.00 IS CODE =  51
----------------------------------------------------------------------------
  >>>>>COMPUTE TRAPEZOIDAL CHANNEL FLOW<<<<<
  >>>>>TRAVELTIME THRU SUBAREA (EXISTING ELEMENT)<<<<<
============================================================================
  ELEVATION DATA: UPSTREAM(FEET) =    480.00  DOWNSTREAM(FEET) =    382.00
  CHANNEL LENGTH THRU SUBAREA(FEET) =  1608.60   CHANNEL SLOPE =  0.0609
  CHANNEL BASE(FEET) =   18.00   "Z" FACTOR =   6.000
  MANNING'S FACTOR = 0.030   MAXIMUM DEPTH(FEET) =  10.00
   100 YEAR RAINFALL INTENSITY(INCH/HOUR) =  3.164
  *USER SPECIFIED(SUBAREA):
  USER-SPECIFIED RUNOFF COEFFICIENT = .3500
  S.C.S. CURVE NUMBER (AMC II) =   0
  TRAVEL TIME COMPUTED USING ESTIMATED FLOW(CFS) =     34.92
  TRAVEL TIME THRU SUBAREA BASED ON VELOCITY(FEET/SEC.) =   5.42
  AVERAGE FLOW DEPTH(FEET) =   0.32   TRAVEL TIME(MIN.) =   4.95
  Tc(MIN.) =  15.58
  SUBAREA AREA(ACRES) =    26.80       SUBAREA RUNOFF(CFS) =   29.68
  AREA-AVERAGE RUNOFF COEFFICIENT =  0.350
  TOTAL AREA(ACRES) =     40.90         PEAK FLOW RATE(CFS) =      45.29

  END OF SUBAREA CHANNEL FLOW HYDRAULICS:
  DEPTH(FEET) =  0.38   FLOW VELOCITY(FEET/SEC.) =   5.93
  LONGEST FLOWPATH FROM NODE    200.00 TO NODE    210.00 =  2731.50 FEET.

****************************************************************************
  FLOW PROCESS FROM NODE    210.00 TO NODE    210.00 IS CODE =   1
----------------------------------------------------------------------------
  >>>>>DESIGNATE INDEPENDENT STREAM FOR CONFLUENCE<<<<<
```

```
==============================================================================
  TOTAL NUMBER OF STREAMS =  2
  CONFLUENCE VALUES USED FOR INDEPENDENT STREAM  1 ARE:
  TIME OF CONCENTRATION(MIN.) =  15.58
  RAINFALL INTENSITY(INCH/HR) =   3.16
  TOTAL STREAM AREA(ACRES) =    40.90
  PEAK FLOW RATE(CFS) AT CONFLUENCE =     45.29

+----------------------------------------------------------------------------+
| Q(100)=155.3 CFS; A=53.2 AC; TC=8.9 MIN;                                   |
| RUNOFF FROM CEVITA AND VILLAGE 11 (NORTH OF THE PROJECT)                   |
| FROM HUNSAKER AND REC                                                      |
+----------------------------------------------------------------------------+

****************************************************************************
  FLOW PROCESS FROM NODE    206.00 TO NODE    206.00 IS CODE =   7
----------------------------------------------------------------------------
  >>>>>USER SPECIFIED HYDROLOGY INFORMATION AT NODE<<<<<
==============================================================================
  USER-SPECIFIED VALUES ARE AS FOLLOWS:
  TC(MIN) =   8.90   RAIN INTENSITY(INCH/HOUR) =  4.54
  TOTAL AREA(ACRES) =    53.20   TOTAL RUNOFF(CFS) =    155.30

****************************************************************************
  FLOW PROCESS FROM NODE    206.00 TO NODE    210.00 IS CODE =  51
----------------------------------------------------------------------------
  >>>>>COMPUTE TRAPEZOIDAL CHANNEL FLOW<<<<<
  >>>>>TRAVELTIME THRU SUBAREA (EXISTING ELEMENT)<<<<<
==============================================================================
  ELEVATION DATA: UPSTREAM(FEET) =    492.00  DOWNSTREAM(FEET) =    382.00
  CHANNEL LENGTH THRU SUBAREA(FEET) =  2434.60   CHANNEL SLOPE =  0.0452
  CHANNEL BASE(FEET) =   26.00   "Z" FACTOR =   8.000
  MANNING'S FACTOR = 0.030   MAXIMUM DEPTH(FEET) =  10.00
   100 YEAR RAINFALL INTENSITY(INCH/HOUR) =  3.377
  *USER SPECIFIED(SUBAREA):
  USER-SPECIFIED RUNOFF COEFFICIENT = .3500
  S.C.S. CURVE NUMBER (AMC II) =   0
  TRAVEL TIME COMPUTED USING ESTIMATED FLOW(CFS) =    192.47
  TRAVEL TIME THRU SUBAREA BASED ON VELOCITY(FEET/SEC.) =   7.82
  AVERAGE FLOW DEPTH(FEET) =   0.77   TRAVEL TIME(MIN.) =   5.19
  Tc(MIN.) =  14.09
  SUBAREA AREA(ACRES) =    61.80       SUBAREA RUNOFF(CFS) =   73.04
  AREA-AVERAGE RUNOFF COEFFICIENT =  0.485
  TOTAL AREA(ACRES) =    115.00         PEAK FLOW RATE(CFS) =     188.54

  END OF SUBAREA CHANNEL FLOW HYDRAULICS:
  DEPTH(FEET) =  0.76   FLOW VELOCITY(FEET/SEC.) =   7.76
  LONGEST FLOWPATH FROM NODE      0.00 TO NODE    210.00 =  2434.60 FEET.

****************************************************************************
  FLOW PROCESS FROM NODE    210.00 TO NODE    210.00 IS CODE =   1
----------------------------------------------------------------------------
  >>>>>DESIGNATE INDEPENDENT STREAM FOR CONFLUENCE<<<<<
  >>>>>AND COMPUTE VARIOUS CONFLUENCED STREAM VALUES<<<<<
==============================================================================
  TOTAL NUMBER OF STREAMS =  2
  CONFLUENCE VALUES USED FOR INDEPENDENT STREAM  2 ARE:
  TIME OF CONCENTRATION(MIN.) =  14.09
  RAINFALL INTENSITY(INCH/HR) =   3.38
  TOTAL STREAM AREA(ACRES) =   115.00
  PEAK FLOW RATE(CFS) AT CONFLUENCE =    188.54
```

```
** CONFLUENCE DATA **
STREAM      RUNOFF      Tc       INTENSITY      AREA
NUMBER       (CFS)    (MIN.)   (INCH/HOUR)    (ACRE)
    1        45.29    15.58        3.164        40.90
    2       188.54    14.09        3.377       115.00

RAINFALL INTENSITY AND TIME OF CONCENTRATION RATIO
CONFLUENCE FORMULA USED FOR  2 STREAMS.

** PEAK FLOW RATE TABLE **
STREAM      RUNOFF      Tc       INTENSITY
NUMBER       (CFS)    (MIN.)   (INCH/HOUR)
    1       229.47    14.09       3.377
    2       221.93    15.58       3.164

COMPUTED CONFLUENCE ESTIMATES ARE AS FOLLOWS:
PEAK FLOW RATE(CFS) =    229.47   Tc(MIN.) =   14.09
TOTAL AREA(ACRES) =    155.90
LONGEST FLOWPATH FROM NODE    200.00 TO NODE    210.00 =  2731.50 FEET.

****************************************************************************
FLOW PROCESS FROM NODE    210.00 TO NODE    212.00 IS CODE =  51
----------------------------------------------------------------------------
>>>>>COMPUTE TRAPEZOIDAL CHANNEL FLOW<<<<<
>>>>>TRAVELTIME THRU SUBAREA (EXISTING ELEMENT)<<<<<
============================================================================
ELEVATION DATA: UPSTREAM(FEET) =    382.00  DOWNSTREAM(FEET) =    372.00
CHANNEL LENGTH THRU SUBAREA(FEET) =   357.70   CHANNEL SLOPE =  0.0280
CHANNEL BASE(FEET) =   25.00   "Z" FACTOR =   8.000
MANNING'S FACTOR = 0.030   MAXIMUM DEPTH(FEET) =  10.00
 100 YEAR RAINFALL INTENSITY(INCH/HOUR) =  3.254
*USER SPECIFIED(SUBAREA):
USER-SPECIFIED RUNOFF COEFFICIENT = .3500
S.C.S. CURVE NUMBER (AMC II) =   0
TRAVEL TIME COMPUTED USING ESTIMATED FLOW(CFS) =    235.51
TRAVEL TIME THRU SUBAREA BASED ON VELOCITY(FEET/SEC.) =   7.17
AVERAGE FLOW DEPTH(FEET) =   1.00   TRAVEL TIME(MIN.) =   0.83
Tc(MIN.) =  14.92
SUBAREA AREA(ACRES) =    10.60       SUBAREA RUNOFF(CFS) =   12.07
AREA-AVERAGE RUNOFF COEFFICIENT =  0.444
TOTAL AREA(ACRES) =    166.50         PEAK FLOW RATE(CFS) =     240.35

END OF SUBAREA CHANNEL FLOW HYDRAULICS:
DEPTH(FEET) =  1.01   FLOW VELOCITY(FEET/SEC.) =   7.19
LONGEST FLOWPATH FROM NODE    200.00 TO NODE    212.00 =  3089.20 FEET.
============================================================================
END OF STUDY SUMMARY:
TOTAL AREA(ACRES)      =    166.50  TC(MIN.) =     14.92
PEAK FLOW RATE(CFS)    =    240.35
============================================================================
============================================================================
END OF RATIONAL METHOD ANALYSIS
```

```
****************************************************************************

            RATIONAL METHOD HYDROLOGY COMPUTER PROGRAM PACKAGE
            Reference: SAN DIEGO COUNTY FLOOD CONTROL DISTRICT
                          2003,1985,1981 HYDROLOGY MANUAL
         (c) Copyright 1982-2003 Advanced Engineering Software (aes)
             Ver. 1.5A Release Date: 01/01/2003  License ID 1261

                              Analysis prepared by:

                            RICK ENGINEERING COMPANY
                                5620 Friars Road
                            San Diego, California 92110
                          619-291-0707   Fax 619-291-4165

 ************************** DESCRIPTION OF STUDY **************************
* UNIVERSITY PARK AND RESEARCH CENTER (UPRC); J-16693-A                    *
* BASIN 300; 100-YEAR, 6-HOUR                                              *
* PRE-PROJECT                                                              *
 ****************************************************************************

  FILE NAME: UP3HE00.RAT
  TIME/DATE OF STUDY: 10:55 12/17/2013
----------------------------------------------------------------------------
  USER SPECIFIED HYDROLOGY AND HYDRAULIC MODEL INFORMATION:
----------------------------------------------------------------------------
  2003 SAN DIEGO MANUAL CRITERIA

  USER SPECIFIED STORM EVENT(YEAR) = 100.00
  6-HOUR DURATION PRECIPITATION (INCHES) =   2.500
  SPECIFIED MINIMUM PIPE SIZE(INCH) =  18.00
  SPECIFIED PERCENT OF GRADIENTS(DECIMAL) TO USE FOR FRICTION SLOPE = 0.90
  SAN DIEGO HYDROLOGY MANUAL "C"-VALUES USED FOR RATIONAL METHOD
  NOTE: USE MODIFIED RATIONAL METHOD PROCEDURES FOR CONFLUENCE ANALYSIS
  *USER-DEFINED STREET-SECTIONS FOR COUPLED PIPEFLOW AND STREETFLOW MODEL*
     HALF-  CROWN TO   STREET-CROSSFALL:   CURB  GUTTER-GEOMETRIES:  MANNING
     WIDTH  CROSSFALL  IN-  / OUT-/PARK-  HEIGHT  WIDTH  LIP   HIKE  FACTOR
NO.   (FT)     (FT)    SIDE / SIDE/ WAY    (FT)    (FT)  (FT)  (FT)    (n)
===  =====  =========  =================  ======  ===== ====== ===== =======
  1   30.0     20.0    0.018/0.018/0.020   0.67    2.00 0.0313 0.167 0.0150

  GLOBAL STREET FLOW-DEPTH CONSTRAINTS:
    1. Relative Flow-Depth =  0.00 FEET
       as (Maximum Allowable Street Flow Depth) - (Top-of-Curb)
    2. (Depth)*(Velocity) Constraint =  6.0 (FT*FT/S)
  *SIZE PIPE WITH A FLOW CAPACITY GREATER THAN
   OR EQUAL TO THE UPSTREAM TRIBUTARY PIPE.*

+--------------------------------------------------------------------------+
| Q(100)=21.4 CFS A=22.5 AC Tc=18.9 MIN                                    |
| RUNOFF FROM HIGH-TECH SCHOOL WESTERN PORTION                             |
| PROVIDED BY THE CITY OF CHULA VISTA, ANALYSIS BY RBF CONSULTING          |
+--------------------------------------------------------------------------+

****************************************************************************
  FLOW PROCESS FROM NODE    300.00 TO NODE    300.00 IS CODE =   7
----------------------------------------------------------------------------
  >>>>>USER SPECIFIED HYDROLOGY INFORMATION AT NODE<<<<<
============================================================================
  USER-SPECIFIED VALUES ARE AS FOLLOWS:
```

```
  TC(MIN) =  18.90   RAIN INTENSITY(INCH/HOUR) =  2.79
  TOTAL AREA(ACRES) =    22.50   TOTAL RUNOFF(CFS) =     21.40

****************************************************************************
  FLOW PROCESS FROM NODE    300.00 TO NODE    310.00 IS CODE =  51
----------------------------------------------------------------------------
  >>>>>COMPUTE TRAPEZOIDAL CHANNEL FLOW<<<<<
  >>>>>TRAVELTIME THRU SUBAREA (EXISTING ELEMENT)<<<<<
============================================================================
  ELEVATION DATA: UPSTREAM(FEET) =    464.00  DOWNSTREAM(FEET) =    386.00
  CHANNEL LENGTH THRU SUBAREA(FEET) =  1820.20   CHANNEL SLOPE =  0.0429
  CHANNEL BASE(FEET) =   11.00   "Z" FACTOR =   7.000
  MANNING'S FACTOR = 0.035   MAXIMUM DEPTH(FEET) =  10.00
   100 YEAR RAINFALL INTENSITY(INCH/HOUR) =  2.335
  *USER SPECIFIED(SUBAREA):
  USER-SPECIFIED RUNOFF COEFFICIENT = .3500
  S.C.S. CURVE NUMBER (AMC II) =   0
  TRAVEL TIME COMPUTED USING ESTIMATED FLOW(CFS) =     39.84
  TRAVEL TIME THRU SUBAREA BASED ON VELOCITY(FEET/SEC.) =   5.01
  AVERAGE FLOW DEPTH(FEET) =   0.54   TRAVEL TIME(MIN.) =   6.06
  Tc(MIN.) =  24.96
  SUBAREA AREA(ACRES) =    45.00       SUBAREA RUNOFF(CFS) =   36.78
  AREA-AVERAGE RUNOFF COEFFICIENT =  0.347
  TOTAL AREA(ACRES) =     67.50         PEAK FLOW RATE(CFS) =      54.66

  END OF SUBAREA CHANNEL FLOW HYDRAULICS:
  DEPTH(FEET) =  0.64   FLOW VELOCITY(FEET/SEC.) =   5.48
  LONGEST FLOWPATH FROM NODE      0.00 TO NODE    310.00 =  1820.20 FEET.

****************************************************************************
  FLOW PROCESS FROM NODE    310.00 TO NODE    310.00 IS CODE =   1
----------------------------------------------------------------------------
  >>>>>DESIGNATE INDEPENDENT STREAM FOR CONFLUENCE<<<<<
============================================================================
  TOTAL NUMBER OF STREAMS =  2
  CONFLUENCE VALUES USED FOR INDEPENDENT STREAM  1 ARE:
  TIME OF CONCENTRATION(MIN.) =  24.96
  RAINFALL INTENSITY(INCH/HR) =   2.33
  TOTAL STREAM AREA(ACRES) =    67.50
  PEAK FLOW RATE(CFS) AT CONFLUENCE =     54.66

****************************************************************************
  FLOW PROCESS FROM NODE    302.00 TO NODE    304.00 IS CODE =  21
----------------------------------------------------------------------------
  >>>>>RATIONAL METHOD INITIAL SUBAREA ANALYSIS<<<<<
============================================================================
  *USER SPECIFIED(SUBAREA):
  USER-SPECIFIED RUNOFF COEFFICIENT = .3500
  S.C.S. CURVE NUMBER (AMC II) =   0
  INITIAL SUBAREA FLOW-LENGTH(FEET) =    60.00
  UPSTREAM ELEVATION(FEET) =    551.00
  DOWNSTREAM ELEVATION(FEET) =    550.00
  ELEVATION DIFFERENCE(FEET) =      1.00
  SUBAREA OVERLAND TIME OF FLOW(MIN.) =    8.820
   100 YEAR RAINFALL INTENSITY(INCH/HOUR) =  4.568
  SUBAREA RUNOFF(CFS) =      0.32
  TOTAL AREA(ACRES) =      0.20   TOTAL RUNOFF(CFS) =      0.32

****************************************************************************
  FLOW PROCESS FROM NODE    304.00 TO NODE    306.00 IS CODE =  51
----------------------------------------------------------------------------
```

```
>>>>>COMPUTE TRAPEZOIDAL CHANNEL FLOW<<<<<
>>>>>TRAVELTIME THRU SUBAREA (EXISTING ELEMENT)<<<<<
==============================================================================
ELEVATION DATA: UPSTREAM(FEET) =    550.00  DOWNSTREAM(FEET) =    494.00
CHANNEL LENGTH THRU SUBAREA(FEET) =   422.00   CHANNEL SLOPE =  0.1327
CHANNEL BASE(FEET) =   15.00   "Z" FACTOR =   5.000
MANNING'S FACTOR = 0.035   MAXIMUM DEPTH(FEET) =  10.00
 100 YEAR RAINFALL INTENSITY(INCH/HOUR) =  3.689
*USER SPECIFIED(SUBAREA):
USER-SPECIFIED RUNOFF COEFFICIENT = .3500
S.C.S. CURVE NUMBER (AMC II) =   0
TRAVEL TIME COMPUTED USING ESTIMATED FLOW(CFS) =      1.51
TRAVEL TIME THRU SUBAREA BASED ON VELOCITY(FEET/SEC.) =   2.03
AVERAGE FLOW DEPTH(FEET) =   0.05   TRAVEL TIME(MIN.) =   3.46
Tc(MIN.) =  12.28
SUBAREA AREA(ACRES) =     1.80       SUBAREA RUNOFF(CFS) =    2.32
AREA-AVERAGE RUNOFF COEFFICIENT =  0.350
TOTAL AREA(ACRES) =      2.00         PEAK FLOW RATE(CFS) =       2.58

END OF SUBAREA CHANNEL FLOW HYDRAULICS:
DEPTH(FEET) =  0.07   FLOW VELOCITY(FEET/SEC.) =   2.56
LONGEST FLOWPATH FROM NODE    302.00 TO NODE    306.00 =   482.00 FEET.

****************************************************************************
FLOW PROCESS FROM NODE    306.00 TO NODE    310.00 IS CODE =  51
----------------------------------------------------------------------------
>>>>>COMPUTE TRAPEZOIDAL CHANNEL FLOW<<<<<
>>>>>TRAVELTIME THRU SUBAREA (EXISTING ELEMENT)<<<<<
==============================================================================
ELEVATION DATA: UPSTREAM(FEET) =    494.00  DOWNSTREAM(FEET) =    386.00
CHANNEL LENGTH THRU SUBAREA(FEET) =  1384.00   CHANNEL SLOPE =  0.0780
CHANNEL BASE(FEET) =   16.00   "Z" FACTOR =   3.000
MANNING'S FACTOR = 0.035   MAXIMUM DEPTH(FEET) =  10.00
 100 YEAR RAINFALL INTENSITY(INCH/HOUR) =  2.815
*USER SPECIFIED(SUBAREA):
USER-SPECIFIED RUNOFF COEFFICIENT = .3500
S.C.S. CURVE NUMBER (AMC II) =   0
TRAVEL TIME COMPUTED USING ESTIMATED FLOW(CFS) =     10.63
TRAVEL TIME THRU SUBAREA BASED ON VELOCITY(FEET/SEC.) =   3.61
AVERAGE FLOW DEPTH(FEET) =   0.18   TRAVEL TIME(MIN.) =   6.40
Tc(MIN.) =  18.68
SUBAREA AREA(ACRES) =    16.00       SUBAREA RUNOFF(CFS) =   15.76
AREA-AVERAGE RUNOFF COEFFICIENT =  0.350
TOTAL AREA(ACRES) =     18.00         PEAK FLOW RATE(CFS) =      17.73

END OF SUBAREA CHANNEL FLOW HYDRAULICS:
DEPTH(FEET) =  0.24   FLOW VELOCITY(FEET/SEC.) =   4.43
LONGEST FLOWPATH FROM NODE    302.00 TO NODE    310.00 =  1866.00 FEET.

****************************************************************************
FLOW PROCESS FROM NODE    310.00 TO NODE    310.00 IS CODE =   1
----------------------------------------------------------------------------
>>>>>DESIGNATE INDEPENDENT STREAM FOR CONFLUENCE<<<<<
>>>>>AND COMPUTE VARIOUS CONFLUENCED STREAM VALUES<<<<<
==============================================================================
TOTAL NUMBER OF STREAMS =  2
CONFLUENCE VALUES USED FOR INDEPENDENT STREAM  2 ARE:
TIME OF CONCENTRATION(MIN.) =  18.68
RAINFALL INTENSITY(INCH/HR) =   2.81
TOTAL STREAM AREA(ACRES) =    18.00
PEAK FLOW RATE(CFS) AT CONFLUENCE =     17.73
```

```
** CONFLUENCE DATA **
STREAM      RUNOFF      Tc       INTENSITY      AREA
NUMBER       (CFS)    (MIN.)   (INCH/HOUR)    (ACRE)
    1        54.66    24.96        2.335        67.50
    2        17.73    18.68        2.815        18.00

RAINFALL INTENSITY AND TIME OF CONCENTRATION RATIO
CONFLUENCE FORMULA USED FOR  2 STREAMS.

** PEAK FLOW RATE TABLE **
STREAM      RUNOFF      Tc       INTENSITY
NUMBER       (CFS)    (MIN.)   (INCH/HOUR)
    1        58.64    18.68        2.815
    2        69.37    24.96        2.335

COMPUTED CONFLUENCE ESTIMATES ARE AS FOLLOWS:
PEAK FLOW RATE(CFS) =     69.37   Tc(MIN.) =   24.96
TOTAL AREA(ACRES) =     85.50
LONGEST FLOWPATH FROM NODE    302.00 TO NODE    310.00 =  1866.00 FEET.

****************************************************************************
FLOW PROCESS FROM NODE    310.00 TO NODE    325.00 IS CODE =  51
----------------------------------------------------------------------------
>>>>>COMPUTE TRAPEZOIDAL CHANNEL FLOW<<<<<
>>>>>TRAVELTIME THRU SUBAREA (EXISTING ELEMENT)<<<<<
============================================================================
ELEVATION DATA: UPSTREAM(FEET) =    386.00  DOWNSTREAM(FEET) =    358.00
CHANNEL LENGTH THRU SUBAREA(FEET) =   667.50   CHANNEL SLOPE =  0.0419
CHANNEL BASE(FEET) =   11.00   "Z" FACTOR =   5.000
MANNING'S FACTOR = 0.035   MAXIMUM DEPTH(FEET) =  10.00
 100 YEAR RAINFALL INTENSITY(INCH/HOUR) =  2.234
*USER SPECIFIED(SUBAREA):
USER-SPECIFIED RUNOFF COEFFICIENT = .3500
S.C.S. CURVE NUMBER (AMC II) =   0
TRAVEL TIME COMPUTED USING ESTIMATED FLOW(CFS) =     73.60
TRAVEL TIME THRU SUBAREA BASED ON VELOCITY(FEET/SEC.) =   6.30
AVERAGE FLOW DEPTH(FEET) =   0.78   TRAVEL TIME(MIN.) =   1.77
Tc(MIN.) =  26.73
SUBAREA AREA(ACRES) =    10.80       SUBAREA RUNOFF(CFS) =    8.45
AREA-AVERAGE RUNOFF COEFFICIENT =  0.348
TOTAL AREA(ACRES) =     96.30         PEAK FLOW RATE(CFS) =      74.83

END OF SUBAREA CHANNEL FLOW HYDRAULICS:
DEPTH(FEET) =  0.79   FLOW VELOCITY(FEET/SEC.) =   6.33
LONGEST FLOWPATH FROM NODE    302.00 TO NODE    325.00 =  2533.50 FEET.

****************************************************************************
FLOW PROCESS FROM NODE    325.00 TO NODE    399.00 IS CODE =  51
----------------------------------------------------------------------------
>>>>>COMPUTE TRAPEZOIDAL CHANNEL FLOW<<<<<
>>>>>TRAVELTIME THRU SUBAREA (EXISTING ELEMENT)<<<<<
============================================================================
ELEVATION DATA: UPSTREAM(FEET) =    358.00  DOWNSTREAM(FEET) =    352.00
CHANNEL LENGTH THRU SUBAREA(FEET) =   122.80   CHANNEL SLOPE =  0.0489
CHANNEL BASE(FEET) =    3.00   "Z" FACTOR =   3.000
MANNING'S FACTOR = 0.035   MAXIMUM DEPTH(FEET) =  10.00
 100 YEAR RAINFALL INTENSITY(INCH/HOUR) =  2.221
*USER SPECIFIED(SUBAREA):
USER-SPECIFIED RUNOFF COEFFICIENT = .3500
S.C.S. CURVE NUMBER (AMC II) =   0
```

```
  TRAVEL TIME COMPUTED USING ESTIMATED FLOW(CFS) =      75.45
  TRAVEL TIME THRU SUBAREA BASED ON VELOCITY(FEET/SEC.) =   8.17
  AVERAGE FLOW DEPTH(FEET) =   1.32   TRAVEL TIME(MIN.) =   0.25
  Tc(MIN.) =  26.98
  SUBAREA AREA(ACRES) =     1.60       SUBAREA RUNOFF(CFS) =    1.24
  AREA-AVERAGE RUNOFF COEFFICIENT =  0.348
  TOTAL AREA(ACRES) =     97.90         PEAK FLOW RATE(CFS) =      75.62

  END OF SUBAREA CHANNEL FLOW HYDRAULICS:
  DEPTH(FEET) =  1.32   FLOW VELOCITY(FEET/SEC.) =   8.19
  LONGEST FLOWPATH FROM NODE    302.00 TO NODE    399.00 =  2656.30 FEET.

****************************************************************************
  FLOW PROCESS FROM NODE    399.00 TO NODE    399.00 IS CODE =  81
----------------------------------------------------------------------------
  >>>>>ADDITION OF SUBAREA TO MAINLINE PEAK FLOW<<<<<
============================================================================
   100 YEAR RAINFALL INTENSITY(INCH/HOUR) =  2.221
  *USER SPECIFIED(SUBAREA):
  USER-SPECIFIED RUNOFF COEFFICIENT = .3500
  S.C.S. CURVE NUMBER (AMC II) =   0
  AREA-AVERAGE RUNOFF COEFFICIENT = 0.3481
  SUBAREA AREA(ACRES) =   18.30   SUBAREA RUNOFF(CFS) =   14.22
  TOTAL AREA(ACRES) =    116.20   TOTAL RUNOFF(CFS) =   89.85
  TC(MIN.) =  26.98
============================================================================
  END OF STUDY SUMMARY:
  TOTAL AREA(ACRES)      =    116.20  TC(MIN.) =     26.98
  PEAK FLOW RATE(CFS)    =     89.85
============================================================================
============================================================================
  END OF RATIONAL METHOD ANALYSIS
```

```
****************************************************************************

            RATIONAL METHOD HYDROLOGY COMPUTER PROGRAM PACKAGE
            Reference: SAN DIEGO COUNTY FLOOD CONTROL DISTRICT
                          2003,1985,1981 HYDROLOGY MANUAL
         (c) Copyright 1982-2003 Advanced Engineering Software (aes)
             Ver. 1.5A Release Date: 01/01/2003  License ID 1261

                          Analysis prepared by:

                         RICK ENGINEERING COMPANY
                             5620 Friars Road
                         San Diego, California 92110
                       619-291-0707   Fax 619-291-4165

 ************************** DESCRIPTION OF STUDY **************************
* UNIVERSITY PARK AND RESEARCH CENTER (UPRC); J-16693-A                    *
* BASIN 400; 100-YEAR, 6-HOUR                                              *
* PRE-PROJECT                                                              *
 ****************************************************************************

  FILE NAME: UP4HE00.RAT
  TIME/DATE OF STUDY: 11:12 12/17/2013
----------------------------------------------------------------------------
  USER SPECIFIED HYDROLOGY AND HYDRAULIC MODEL INFORMATION:
----------------------------------------------------------------------------
  2003 SAN DIEGO MANUAL CRITERIA

  USER SPECIFIED STORM EVENT(YEAR) = 100.00
  6-HOUR DURATION PRECIPITATION (INCHES) =   2.500
  SPECIFIED MINIMUM PIPE SIZE(INCH) =  18.00
  SPECIFIED PERCENT OF GRADIENTS(DECIMAL) TO USE FOR FRICTION SLOPE = 0.90
  SAN DIEGO HYDROLOGY MANUAL "C"-VALUES USED FOR RATIONAL METHOD
  NOTE: USE MODIFIED RATIONAL METHOD PROCEDURES FOR CONFLUENCE ANALYSIS
  *USER-DEFINED STREET-SECTIONS FOR COUPLED PIPEFLOW AND STREETFLOW MODEL*
     HALF-  CROWN TO   STREET-CROSSFALL:   CURB  GUTTER-GEOMETRIES:  MANNING
     WIDTH  CROSSFALL  IN-  / OUT-/PARK-  HEIGHT  WIDTH  LIP   HIKE  FACTOR
NO.   (FT)     (FT)    SIDE / SIDE/ WAY    (FT)    (FT)  (FT)  (FT)    (n)
===  =====  =========  =================  ======  ===== ====== ===== =======
  1   30.0     20.0    0.018/0.018/0.020   0.67    2.00 0.0313 0.167 0.0150

  GLOBAL STREET FLOW-DEPTH CONSTRAINTS:
    1. Relative Flow-Depth =  0.00 FEET
       as (Maximum Allowable Street Flow Depth) - (Top-of-Curb)
    2. (Depth)*(Velocity) Constraint =  6.0 (FT*FT/S)
  *SIZE PIPE WITH A FLOW CAPACITY GREATER THAN
   OR EQUAL TO THE UPSTREAM TRIBUTARY PIPE.*

****************************************************************************
  FLOW PROCESS FROM NODE    400.00 TO NODE    402.00 IS CODE =  21
----------------------------------------------------------------------------
  >>>>>RATIONAL METHOD INITIAL SUBAREA ANALYSIS<<<<<
============================================================================
  *USER SPECIFIED(SUBAREA):
  USER-SPECIFIED RUNOFF COEFFICIENT = .3500
  S.C.S. CURVE NUMBER (AMC II) =   0
  INITIAL SUBAREA FLOW-LENGTH(FEET) =   100.00
  UPSTREAM ELEVATION(FEET) =    519.50
  DOWNSTREAM ELEVATION(FEET) =    510.00
  ELEVATION DIFFERENCE(FEET) =      9.50
```

```
  SUBAREA OVERLAND TIME OF FLOW(MIN.) =     6.375
   100 YEAR RAINFALL INTENSITY(INCH/HOUR) =  5.632
  SUBAREA RUNOFF(CFS) =       0.39
  TOTAL AREA(ACRES) =       0.20   TOTAL RUNOFF(CFS) =       0.39

****************************************************************************
  FLOW PROCESS FROM NODE    402.00 TO NODE    404.00 IS CODE =  51
----------------------------------------------------------------------------
  >>>>>COMPUTE TRAPEZOIDAL CHANNEL FLOW<<<<<
  >>>>>TRAVELTIME THRU SUBAREA (EXISTING ELEMENT)<<<<<
============================================================================
  ELEVATION DATA: UPSTREAM(FEET) =    510.00  DOWNSTREAM(FEET) =    350.00
  CHANNEL LENGTH THRU SUBAREA(FEET) =  1910.00   CHANNEL SLOPE =  0.0838
  CHANNEL BASE(FEET) =   10.00   "Z" FACTOR =   5.000
  MANNING'S FACTOR = 0.030   MAXIMUM DEPTH(FEET) =  10.00
   100 YEAR RAINFALL INTENSITY(INCH/HOUR) =  3.801
  *USER SPECIFIED(SUBAREA):
  USER-SPECIFIED RUNOFF COEFFICIENT = .3500
  S.C.S. CURVE NUMBER (AMC II) =   0
  TRAVEL TIME COMPUTED USING ESTIMATED FLOW(CFS) =     20.69
  TRAVEL TIME THRU SUBAREA BASED ON VELOCITY(FEET/SEC.) =   5.95
  AVERAGE FLOW DEPTH(FEET) =   0.30   TRAVEL TIME(MIN.) =   5.35
  Tc(MIN.) =  11.73
  SUBAREA AREA(ACRES) =    29.50       SUBAREA RUNOFF(CFS) =   39.24
  AREA-AVERAGE RUNOFF COEFFICIENT =  0.350
  TOTAL AREA(ACRES) =     29.70         PEAK FLOW RATE(CFS) =      39.51

  END OF SUBAREA CHANNEL FLOW HYDRAULICS:
  DEPTH(FEET) =  0.44   FLOW VELOCITY(FEET/SEC.) =   7.37
  LONGEST FLOWPATH FROM NODE    400.00 TO NODE    404.00 =  2010.00 FEET.
============================================================================
  END OF STUDY SUMMARY:
  TOTAL AREA(ACRES)      =     29.70  TC(MIN.) =     11.73
  PEAK FLOW RATE(CFS)    =     39.51
============================================================================
============================================================================
  END OF RATIONAL METHOD ANALYSIS
```

```
****************************************************************************

            RATIONAL METHOD HYDROLOGY COMPUTER PROGRAM PACKAGE
            Reference: SAN DIEGO COUNTY FLOOD CONTROL DISTRICT
                         2003,1985,1981 HYDROLOGY MANUAL
         (c) Copyright 1982-2003 Advanced Engineering Software (aes)
             Ver. 1.5A Release Date: 01/01/2003  License ID 1261

                          Analysis prepared by:

                        RICK ENGINEERING COMPANY
                            5620 Friars Road
                        San Diego, California 92110
                      619-291-0707   Fax 619-291-4165

 ************************** DESCRIPTION OF STUDY **************************
* UNIVERSITY PARK AND RESEARCH CENTER (UPRC); J-16693-A                    *
* BASIN 500; 100-YEAR, 6-HOUR                                              *
* PRE-PROJECT                                                              *
 ****************************************************************************

  FILE NAME: UP5HE00.RAT
  TIME/DATE OF STUDY: 11:10 12/17/2013
----------------------------------------------------------------------------
  USER SPECIFIED HYDROLOGY AND HYDRAULIC MODEL INFORMATION:
----------------------------------------------------------------------------
  2003 SAN DIEGO MANUAL CRITERIA

  USER SPECIFIED STORM EVENT(YEAR) = 100.00
  6-HOUR DURATION PRECIPITATION (INCHES) =   2.500
  SPECIFIED MINIMUM PIPE SIZE(INCH) =  18.00
  SPECIFIED PERCENT OF GRADIENTS(DECIMAL) TO USE FOR FRICTION SLOPE = 0.90
  SAN DIEGO HYDROLOGY MANUAL "C"-VALUES USED FOR RATIONAL METHOD
  NOTE: USE MODIFIED RATIONAL METHOD PROCEDURES FOR CONFLUENCE ANALYSIS
  *USER-DEFINED STREET-SECTIONS FOR COUPLED PIPEFLOW AND STREETFLOW MODEL*
     HALF-  CROWN TO   STREET-CROSSFALL:   CURB  GUTTER-GEOMETRIES:  MANNING
     WIDTH  CROSSFALL  IN-  / OUT-/PARK-  HEIGHT  WIDTH  LIP   HIKE  FACTOR
NO.   (FT)     (FT)    SIDE / SIDE/ WAY    (FT)    (FT)  (FT)  (FT)    (n)
===  =====  =========  =================  ======  ===== ====== ===== =======
  1   30.0     20.0    0.018/0.018/0.020   0.67    2.00 0.0313 0.167 0.0150

  GLOBAL STREET FLOW-DEPTH CONSTRAINTS:
    1. Relative Flow-Depth =  0.00 FEET
       as (Maximum Allowable Street Flow Depth) - (Top-of-Curb)
    2. (Depth)*(Velocity) Constraint =  6.0 (FT*FT/S)
  *SIZE PIPE WITH A FLOW CAPACITY GREATER THAN
   OR EQUAL TO THE UPSTREAM TRIBUTARY PIPE.*

****************************************************************************
  FLOW PROCESS FROM NODE    500.00 TO NODE    502.00 IS CODE =  21
----------------------------------------------------------------------------
  >>>>>RATIONAL METHOD INITIAL SUBAREA ANALYSIS<<<<<
============================================================================
  *USER SPECIFIED(SUBAREA):
  USER-SPECIFIED RUNOFF COEFFICIENT = .3500
  S.C.S. CURVE NUMBER (AMC II) =   0
  INITIAL SUBAREA FLOW-LENGTH(FEET) =   100.00
  UPSTREAM ELEVATION(FEET) =    524.00
  DOWNSTREAM ELEVATION(FEET) =    514.00
  ELEVATION DIFFERENCE(FEET) =     10.00
```

```
  SUBAREA OVERLAND TIME OF FLOW(MIN.) =     6.267
  WARNING: THE MAXIMUM OVERLAND FLOW SLOPE, 10.%, IS USED IN Tc CALCULATION!
   100 YEAR RAINFALL INTENSITY(INCH/HOUR) =  5.694
  SUBAREA RUNOFF(CFS) =       0.20
  TOTAL AREA(ACRES) =       0.10   TOTAL RUNOFF(CFS) =       0.20

****************************************************************************
  FLOW PROCESS FROM NODE    502.00 TO NODE    504.00 IS CODE =  51
----------------------------------------------------------------------------
  >>>>>COMPUTE TRAPEZOIDAL CHANNEL FLOW<<<<<
  >>>>>TRAVELTIME THRU SUBAREA (EXISTING ELEMENT)<<<<<
============================================================================
  ELEVATION DATA: UPSTREAM(FEET) =    514.00  DOWNSTREAM(FEET) =    374.00
  CHANNEL LENGTH THRU SUBAREA(FEET) =   817.50   CHANNEL SLOPE =  0.1713
  CHANNEL BASE(FEET) =   15.00   "Z" FACTOR =  15.000
  MANNING'S FACTOR = 0.030   MAXIMUM DEPTH(FEET) =  10.00
   100 YEAR RAINFALL INTENSITY(INCH/HOUR) =  4.269
  *USER SPECIFIED(SUBAREA):
  USER-SPECIFIED RUNOFF COEFFICIENT = .3500
  S.C.S. CURVE NUMBER (AMC II) =   0
  TRAVEL TIME COMPUTED USING ESTIMATED FLOW(CFS) =       5.98
  TRAVEL TIME THRU SUBAREA BASED ON VELOCITY(FEET/SEC.) =   3.86
  AVERAGE FLOW DEPTH(FEET) =   0.09   TRAVEL TIME(MIN.) =   3.53
  Tc(MIN.) =   9.80
  SUBAREA AREA(ACRES) =     7.50       SUBAREA RUNOFF(CFS) =   11.21
  AREA-AVERAGE RUNOFF COEFFICIENT =  0.350
  TOTAL AREA(ACRES) =       7.60         PEAK FLOW RATE(CFS) =       11.35

  END OF SUBAREA CHANNEL FLOW HYDRAULICS:
  DEPTH(FEET) =  0.13   FLOW VELOCITY(FEET/SEC.) =   4.96
  LONGEST FLOWPATH FROM NODE    500.00 TO NODE    504.00 =   917.50 FEET.
============================================================================
  END OF STUDY SUMMARY:
  TOTAL AREA(ACRES)      =      7.60  TC(MIN.) =      9.80
  PEAK FLOW RATE(CFS)    =     11.35
============================================================================
============================================================================
  END OF RATIONAL METHOD ANALYSIS
```

```
****************************************************************************

            RATIONAL METHOD HYDROLOGY COMPUTER PROGRAM PACKAGE
            Reference: SAN DIEGO COUNTY FLOOD CONTROL DISTRICT
                         2003,1985,1981 HYDROLOGY MANUAL
         (c) Copyright 1982-2003 Advanced Engineering Software (aes)
             Ver. 1.5A Release Date: 01/01/2003  License ID 1261

                          Analysis prepared by:

                        RICK ENGINEERING COMPANY
                            5620 Friars Road
                        San Diego, California 92110
                      619-291-0707   Fax 619-291-4165

 ************************** DESCRIPTION OF STUDY **************************
* UNIVERSITY PARK AND RESEARCH CENTER (UPRC); J-16693-A                    *
* BASIN 600; 100-YEAR, 6-HOUR                                              *
* PRE-PROJECT                                                              *
 ***************************************************************************

  FILE NAME: UP6HE00.RAT
  TIME/DATE OF STUDY: 11:13 12/17/2013
----------------------------------------------------------------------------
  USER SPECIFIED HYDROLOGY AND HYDRAULIC MODEL INFORMATION:
----------------------------------------------------------------------------
  2003 SAN DIEGO MANUAL CRITERIA

  USER SPECIFIED STORM EVENT(YEAR) = 100.00
  6-HOUR DURATION PRECIPITATION (INCHES) =   2.500
  SPECIFIED MINIMUM PIPE SIZE(INCH) =  18.00
  SPECIFIED PERCENT OF GRADIENTS(DECIMAL) TO USE FOR FRICTION SLOPE = 0.90
  SAN DIEGO HYDROLOGY MANUAL "C"-VALUES USED FOR RATIONAL METHOD
  NOTE: USE MODIFIED RATIONAL METHOD PROCEDURES FOR CONFLUENCE ANALYSIS
  *USER-DEFINED STREET-SECTIONS FOR COUPLED PIPEFLOW AND STREETFLOW MODEL*
     HALF-  CROWN TO   STREET-CROSSFALL:   CURB  GUTTER-GEOMETRIES:  MANNING
     WIDTH  CROSSFALL  IN-  / OUT-/PARK-  HEIGHT  WIDTH  LIP   HIKE  FACTOR
NO.   (FT)     (FT)    SIDE / SIDE/ WAY    (FT)    (FT)  (FT)  (FT)    (n)
===  =====  =========  =================  ======  ===== ====== ===== =======
  1   30.0     20.0    0.018/0.018/0.020   0.67    2.00 0.0313 0.167 0.0150

  GLOBAL STREET FLOW-DEPTH CONSTRAINTS:
    1. Relative Flow-Depth =  0.00 FEET
       as (Maximum Allowable Street Flow Depth) - (Top-of-Curb)
    2. (Depth)*(Velocity) Constraint =  6.0 (FT*FT/S)
  *SIZE PIPE WITH A FLOW CAPACITY GREATER THAN
   OR EQUAL TO THE UPSTREAM TRIBUTARY PIPE.*

****************************************************************************
  FLOW PROCESS FROM NODE    600.00 TO NODE    602.00 IS CODE =  21
----------------------------------------------------------------------------
  >>>>>RATIONAL METHOD INITIAL SUBAREA ANALYSIS<<<<<
============================================================================
  *USER SPECIFIED(SUBAREA):
  USER-SPECIFIED RUNOFF COEFFICIENT = .3500
  S.C.S. CURVE NUMBER (AMC II) =   0
  INITIAL SUBAREA FLOW-LENGTH(FEET) =    70.00
  UPSTREAM ELEVATION(FEET) =    528.00
  DOWNSTREAM ELEVATION(FEET) =    524.00
  ELEVATION DIFFERENCE(FEET) =      4.00
```

```
  SUBAREA OVERLAND TIME OF FLOW(MIN.) =     6.318
   100 YEAR RAINFALL INTENSITY(INCH/HOUR) =  5.664
  SUBAREA RUNOFF(CFS) =       0.20
  TOTAL AREA(ACRES) =       0.10   TOTAL RUNOFF(CFS) =       0.20

****************************************************************************
  FLOW PROCESS FROM NODE    602.00 TO NODE    604.00 IS CODE =  51
----------------------------------------------------------------------------
  >>>>>COMPUTE TRAPEZOIDAL CHANNEL FLOW<<<<<
  >>>>>TRAVELTIME THRU SUBAREA (EXISTING ELEMENT)<<<<<
============================================================================
  ELEVATION DATA: UPSTREAM(FEET) =    524.00  DOWNSTREAM(FEET) =    396.00
  CHANNEL LENGTH THRU SUBAREA(FEET) =   987.80   CHANNEL SLOPE =  0.1296
  CHANNEL BASE(FEET) =   15.00   "Z" FACTOR =  15.000
  MANNING'S FACTOR = 0.030   MAXIMUM DEPTH(FEET) =  10.00
   100 YEAR RAINFALL INTENSITY(INCH/HOUR) =  3.982
  *USER SPECIFIED(SUBAREA):
  USER-SPECIFIED RUNOFF COEFFICIENT = .3500
  S.C.S. CURVE NUMBER (AMC II) =   0
  TRAVEL TIME COMPUTED USING ESTIMATED FLOW(CFS) =      6.05
  TRAVEL TIME THRU SUBAREA BASED ON VELOCITY(FEET/SEC.) =   3.59
  AVERAGE FLOW DEPTH(FEET) =   0.10   TRAVEL TIME(MIN.) =   4.59
  Tc(MIN.) =  10.91
  SUBAREA AREA(ACRES) =     8.10       SUBAREA RUNOFF(CFS) =   11.29
  AREA-AVERAGE RUNOFF COEFFICIENT =  0.350
  TOTAL AREA(ACRES) =      8.20         PEAK FLOW RATE(CFS) =      11.43

  END OF SUBAREA CHANNEL FLOW HYDRAULICS:
  DEPTH(FEET) =  0.15   FLOW VELOCITY(FEET/SEC.) =   4.49
  LONGEST FLOWPATH FROM NODE    600.00 TO NODE    604.00 =  1057.80 FEET.
============================================================================
  END OF STUDY SUMMARY:
  TOTAL AREA(ACRES)      =      8.20  TC(MIN.) =     10.91
  PEAK FLOW RATE(CFS)    =     11.43
============================================================================
============================================================================
  END OF RATIONAL METHOD ANALYSIS
```

```
****************************************************************************

            RATIONAL METHOD HYDROLOGY COMPUTER PROGRAM PACKAGE
            Reference: SAN DIEGO COUNTY FLOOD CONTROL DISTRICT
                         2003,1985,1981 HYDROLOGY MANUAL
         (c) Copyright 1982-2003 Advanced Engineering Software (aes)
             Ver. 1.5A Release Date: 01/01/2003  License ID 1261

                          Analysis prepared by:

                        RICK ENGINEERING COMPANY
                            5620 Friars Road
                       San Diego, California 92110
                     619-291-0707   Fax 619-291-4165

 ************************** DESCRIPTION OF STUDY **************************
* UNIVERSITY PARK AND RESEARCH CENTER (UPRC); J-16693-A                    *
* BASIN 700; 100-YEAR, 6-HOUR                                              *
* PRE-PROJECT                                                              *
 ****************************************************************************

  FILE NAME: UP7HE00.RAT
  TIME/DATE OF STUDY: 11:20 12/17/2013
----------------------------------------------------------------------------
  USER SPECIFIED HYDROLOGY AND HYDRAULIC MODEL INFORMATION:
----------------------------------------------------------------------------
  2003 SAN DIEGO MANUAL CRITERIA

  USER SPECIFIED STORM EVENT(YEAR) = 100.00
  6-HOUR DURATION PRECIPITATION (INCHES) =   2.500
  SPECIFIED MINIMUM PIPE SIZE(INCH) =  18.00
  SPECIFIED PERCENT OF GRADIENTS(DECIMAL) TO USE FOR FRICTION SLOPE = 0.90
  SAN DIEGO HYDROLOGY MANUAL "C"-VALUES USED FOR RATIONAL METHOD
  NOTE: USE MODIFIED RATIONAL METHOD PROCEDURES FOR CONFLUENCE ANALYSIS
  *USER-DEFINED STREET-SECTIONS FOR COUPLED PIPEFLOW AND STREETFLOW MODEL*
     HALF-  CROWN TO   STREET-CROSSFALL:   CURB  GUTTER-GEOMETRIES:  MANNING
     WIDTH  CROSSFALL  IN-  / OUT-/PARK-  HEIGHT  WIDTH  LIP   HIKE  FACTOR
NO.   (FT)     (FT)    SIDE / SIDE/ WAY    (FT)    (FT)  (FT)  (FT)    (n)
===  =====  =========  =================  ======  =====  ======  =====  =======
  1   30.0     20.0    0.018/0.018/0.020   0.67    2.00 0.0313 0.167 0.0150

  GLOBAL STREET FLOW-DEPTH CONSTRAINTS:
    1. Relative Flow-Depth =  0.00 FEET
       as (Maximum Allowable Street Flow Depth) - (Top-of-Curb)
    2. (Depth)*(Velocity) Constraint =  6.0 (FT*FT/S)
  *SIZE PIPE WITH A FLOW CAPACITY GREATER THAN
   OR EQUAL TO THE UPSTREAM TRIBUTARY PIPE.*

+--------------------------------------------------------------------------+
| Q(100)=923.4 CFS A=336.0 AC Tc=11.8 MIN [ESTIMATED]                      |
| RUNOFF NORTH OF THE PROJECT FROM VILLAGE 9 (HUNSAKER & A)                |
| Q(100) IS ESTIMATED FROM Q(50) PROVIDED BY HUNSAKER & A                  |
+--------------------------------------------------------------------------+

****************************************************************************
  FLOW PROCESS FROM NODE    700.00 TO NODE    700.00 IS CODE =   7
----------------------------------------------------------------------------
  >>>>>USER SPECIFIED HYDROLOGY INFORMATION AT NODE<<<<<
============================================================================
  USER-SPECIFIED VALUES ARE AS FOLLOWS:
```

```
  TC(MIN) =  11.80   RAIN INTENSITY(INCH/HOUR) =  3.79
  TOTAL AREA(ACRES) =   336.00   TOTAL RUNOFF(CFS) =    923.40

****************************************************************************
  FLOW PROCESS FROM NODE    700.00 TO NODE    710.00 IS CODE =  51
----------------------------------------------------------------------------
  >>>>>COMPUTE TRAPEZOIDAL CHANNEL FLOW<<<<<
  >>>>>TRAVELTIME THRU SUBAREA (EXISTING ELEMENT)<<<<<
============================================================================
  ELEVATION DATA: UPSTREAM(FEET) =    427.40  DOWNSTREAM(FEET) =    426.00
  CHANNEL LENGTH THRU SUBAREA(FEET) =   131.30   CHANNEL SLOPE =  0.0107
  CHANNEL BASE(FEET) =    4.00   "Z" FACTOR =   5.000
  MANNING'S FACTOR = 0.035   MAXIMUM DEPTH(FEET) =  10.00
   100 YEAR RAINFALL INTENSITY(INCH/HOUR) =  3.729
  *USER SPECIFIED(SUBAREA):
  USER-SPECIFIED RUNOFF COEFFICIENT = .3500
  S.C.S. CURVE NUMBER (AMC II) =   0
  TRAVEL TIME COMPUTED USING ESTIMATED FLOW(CFS) =    925.68
  TRAVEL TIME THRU SUBAREA BASED ON VELOCITY(FEET/SEC.) =   7.82
  AVERAGE FLOW DEPTH(FEET) =   4.48   TRAVEL TIME(MIN.) =   0.28
  Tc(MIN.) =  12.08
  SUBAREA AREA(ACRES) =     3.50       SUBAREA RUNOFF(CFS) =    4.57
  AREA-AVERAGE RUNOFF COEFFICIENT =  0.722
  TOTAL AREA(ACRES) =    339.50         PEAK FLOW RATE(CFS) =     923.40

  END OF SUBAREA CHANNEL FLOW HYDRAULICS:
  DEPTH(FEET) =  4.48   FLOW VELOCITY(FEET/SEC.) =   7.82
  LONGEST FLOWPATH FROM NODE      0.00 TO NODE    710.00 =   131.30 FEET.

****************************************************************************
  FLOW PROCESS FROM NODE    710.00 TO NODE    710.00 IS CODE =   1
----------------------------------------------------------------------------
  >>>>>DESIGNATE INDEPENDENT STREAM FOR CONFLUENCE<<<<<
============================================================================
  TOTAL NUMBER OF STREAMS =  2
  CONFLUENCE VALUES USED FOR INDEPENDENT STREAM  1 ARE:
  TIME OF CONCENTRATION(MIN.) =  12.08
  RAINFALL INTENSITY(INCH/HR) =   3.73
  TOTAL STREAM AREA(ACRES) =   339.50
  PEAK FLOW RATE(CFS) AT CONFLUENCE =    923.40

+--------------------------------------------------------------------------+
| Q(100)=6.5 CFS A=4.7 AC Tc=13.8 MIN                                      |
| RUNOFF FROM EASTERN PORTION OF HIGH-TECH SCHOOL                          |
| PROVIDED BY THE CITY OF CHULA VISTA, ANALYSIS BY RBF CONSULTING          |
+--------------------------------------------------------------------------+

****************************************************************************
  FLOW PROCESS FROM NODE    703.00 TO NODE    703.00 IS CODE =   7
----------------------------------------------------------------------------
  >>>>>USER SPECIFIED HYDROLOGY INFORMATION AT NODE<<<<<
============================================================================
  USER-SPECIFIED VALUES ARE AS FOLLOWS:
  TC(MIN) =  13.80   RAIN INTENSITY(INCH/HOUR) =  3.42
  TOTAL AREA(ACRES) =     4.70   TOTAL RUNOFF(CFS) =      6.50

****************************************************************************
  FLOW PROCESS FROM NODE    703.00 TO NODE    706.00 IS CODE =  51
----------------------------------------------------------------------------
  >>>>>COMPUTE TRAPEZOIDAL CHANNEL FLOW<<<<<
  >>>>>TRAVELTIME THRU SUBAREA (EXISTING ELEMENT)<<<<<
```

```
==============================================================================
  ELEVATION DATA: UPSTREAM(FEET) =    530.00  DOWNSTREAM(FEET) =    450.00
  CHANNEL LENGTH THRU SUBAREA(FEET) =   524.00   CHANNEL SLOPE =  0.1527
  CHANNEL BASE(FEET) =    5.00   "Z" FACTOR =   5.000
  MANNING'S FACTOR = 0.035   MAXIMUM DEPTH(FEET) =  10.00
   100 YEAR RAINFALL INTENSITY(INCH/HOUR) =  3.199
  *USER SPECIFIED(SUBAREA):
  USER-SPECIFIED RUNOFF COEFFICIENT = .3500
  S.C.S. CURVE NUMBER (AMC II) =   0
  TRAVEL TIME COMPUTED USING ESTIMATED FLOW(CFS) =      8.85
  TRAVEL TIME THRU SUBAREA BASED ON VELOCITY(FEET/SEC.) =   5.75
  AVERAGE FLOW DEPTH(FEET) =   0.25   TRAVEL TIME(MIN.) =   1.52
  Tc(MIN.) =  15.32
  SUBAREA AREA(ACRES) =     4.20       SUBAREA RUNOFF(CFS) =    4.70
  AREA-AVERAGE RUNOFF COEFFICIENT =  0.379
  TOTAL AREA(ACRES) =      8.90         PEAK FLOW RATE(CFS) =      10.78

  END OF SUBAREA CHANNEL FLOW HYDRAULICS:
  DEPTH(FEET) =  0.28   FLOW VELOCITY(FEET/SEC.) =   6.08
  LONGEST FLOWPATH FROM NODE      0.00 TO NODE    706.00 =   524.00 FEET.

****************************************************************************
  FLOW PROCESS FROM NODE    706.00 TO NODE    710.00 IS CODE =  51
----------------------------------------------------------------------------
  >>>>>COMPUTE TRAPEZOIDAL CHANNEL FLOW<<<<<
  >>>>>TRAVELTIME THRU SUBAREA (EXISTING ELEMENT)<<<<<
==============================================================================
  ELEVATION DATA: UPSTREAM(FEET) =    520.00  DOWNSTREAM(FEET) =    450.00
  CHANNEL LENGTH THRU SUBAREA(FEET) =   444.20   CHANNEL SLOPE =  0.1576
  CHANNEL BASE(FEET) =   10.00   "Z" FACTOR =   7.000
  MANNING'S FACTOR = 0.035   MAXIMUM DEPTH(FEET) =  10.00
  CHANNEL FLOW THRU SUBAREA(CFS) =     10.78
  FLOW VELOCITY(FEET/SEC.) =   5.13   FLOW DEPTH(FEET) =   0.19
  TRAVEL TIME(MIN.) =   1.44   Tc(MIN.) =  16.76
  LONGEST FLOWPATH FROM NODE      0.00 TO NODE    710.00 =   968.20 FEET.

****************************************************************************
  FLOW PROCESS FROM NODE    710.00 TO NODE    710.00 IS CODE =   1
----------------------------------------------------------------------------
  >>>>>DESIGNATE INDEPENDENT STREAM FOR CONFLUENCE<<<<<
  >>>>>AND COMPUTE VARIOUS CONFLUENCED STREAM VALUES<<<<<
==============================================================================
  TOTAL NUMBER OF STREAMS =  2
  CONFLUENCE VALUES USED FOR INDEPENDENT STREAM  2 ARE:
  TIME OF CONCENTRATION(MIN.) =  16.76
  RAINFALL INTENSITY(INCH/HR) =   3.02
  TOTAL STREAM AREA(ACRES) =     8.90
  PEAK FLOW RATE(CFS) AT CONFLUENCE =     10.78

  ** CONFLUENCE DATA **
  STREAM     RUNOFF      Tc      INTENSITY      AREA
  NUMBER      (CFS)    (MIN.)   (INCH/HOUR)    (ACRE)
     1       923.40    12.08       3.729        339.50
     2        10.78    16.76       3.019          8.90

  RAINFALL INTENSITY AND TIME OF CONCENTRATION RATIO
  CONFLUENCE FORMULA USED FOR  2 STREAMS.

  ** PEAK FLOW RATE TABLE **
  STREAM     RUNOFF      Tc      INTENSITY
  NUMBER      (CFS)    (MIN.)   (INCH/HOUR)
```

```
     1       931.17    12.08        3.729
     2       758.30    16.76        3.019

  COMPUTED CONFLUENCE ESTIMATES ARE AS FOLLOWS:
  PEAK FLOW RATE(CFS) =    931.17   Tc(MIN.) =   12.08
  TOTAL AREA(ACRES) =    348.40
  LONGEST FLOWPATH FROM NODE      0.00 TO NODE    710.00 =   968.20 FEET.

****************************************************************************
  FLOW PROCESS FROM NODE    710.00 TO NODE    750.00 IS CODE =  51
----------------------------------------------------------------------------
  >>>>>COMPUTE TRAPEZOIDAL CHANNEL FLOW<<<<<
  >>>>>TRAVELTIME THRU SUBAREA (EXISTING ELEMENT)<<<<<
============================================================================
  ELEVATION DATA: UPSTREAM(FEET) =    426.00  DOWNSTREAM(FEET) =    408.00
  CHANNEL LENGTH THRU SUBAREA(FEET) =   810.00   CHANNEL SLOPE =  0.0222
  CHANNEL BASE(FEET) =    5.00   "Z" FACTOR =   1.500
  MANNING'S FACTOR = 0.035   MAXIMUM DEPTH(FEET) =  10.00
   100 YEAR RAINFALL INTENSITY(INCH/HOUR) =  3.535
  *USER SPECIFIED(SUBAREA):
  USER-SPECIFIED RUNOFF COEFFICIENT = .3500
  S.C.S. CURVE NUMBER (AMC II) =   0
  TRAVEL TIME COMPUTED USING ESTIMATED FLOW(CFS) =    940.88
  TRAVEL TIME THRU SUBAREA BASED ON VELOCITY(FEET/SEC.) =  12.96
  AVERAGE FLOW DEPTH(FEET) =   5.49   TRAVEL TIME(MIN.) =   1.04
  Tc(MIN.) =  13.12
  SUBAREA AREA(ACRES) =    15.70       SUBAREA RUNOFF(CFS) =   19.43
  AREA-AVERAGE RUNOFF COEFFICIENT =  0.698
  TOTAL AREA(ACRES) =    364.10         PEAK FLOW RATE(CFS) =     931.17

  END OF SUBAREA CHANNEL FLOW HYDRAULICS:
  DEPTH(FEET) =  5.46   FLOW VELOCITY(FEET/SEC.) =  12.93
  LONGEST FLOWPATH FROM NODE      0.00 TO NODE    750.00 =  1778.20 FEET.

****************************************************************************
  FLOW PROCESS FROM NODE    750.00 TO NODE    750.00 IS CODE =   1
----------------------------------------------------------------------------
  >>>>>DESIGNATE INDEPENDENT STREAM FOR CONFLUENCE<<<<<
============================================================================
  TOTAL NUMBER OF STREAMS =  3
  CONFLUENCE VALUES USED FOR INDEPENDENT STREAM  1 ARE:
  TIME OF CONCENTRATION(MIN.) =  13.12
  RAINFALL INTENSITY(INCH/HR) =   3.54
  TOTAL STREAM AREA(ACRES) =   364.10
  PEAK FLOW RATE(CFS) AT CONFLUENCE =    931.17

+--------------------------------------------------------------------------+
| Q(100)=39.7 CFS A=9.2 AC TC=7.4 MIN                                      |
| RUNOFF FROM SDGE SITE (BASIN 800A)                                       |
| PRELIMINARY RM PERFORMED BY REC                                          |
+--------------------------------------------------------------------------+

****************************************************************************
  FLOW PROCESS FROM NODE    806.00 TO NODE    806.00 IS CODE =   7
----------------------------------------------------------------------------
  >>>>>USER SPECIFIED HYDROLOGY INFORMATION AT NODE<<<<<
============================================================================
  USER-SPECIFIED VALUES ARE AS FOLLOWS:
  TC(MIN) =   7.40   RAIN INTENSITY(INCH/HOUR) =  5.12
  TOTAL AREA(ACRES) =     9.20   TOTAL RUNOFF(CFS) =     39.70
```

```
****************************************************************************
  FLOW PROCESS FROM NODE    806.00 TO NODE    750.00 IS CODE =  51
----------------------------------------------------------------------------
  >>>>>COMPUTE TRAPEZOIDAL CHANNEL FLOW<<<<<
  >>>>>TRAVELTIME THRU SUBAREA (EXISTING ELEMENT)<<<<<
============================================================================
  ELEVATION DATA: UPSTREAM(FEET) =    432.00  DOWNSTREAM(FEET) =    406.00
  CHANNEL LENGTH THRU SUBAREA(FEET) =   293.70   CHANNEL SLOPE =  0.0885
  CHANNEL BASE(FEET) =    6.00   "Z" FACTOR =   7.000
  MANNING'S FACTOR = 0.035   MAXIMUM DEPTH(FEET) =  10.00
  CHANNEL FLOW THRU SUBAREA(CFS) =     39.70
  FLOW VELOCITY(FEET/SEC.) =   6.89   FLOW DEPTH(FEET) =   0.58
  TRAVEL TIME(MIN.) =   0.71   Tc(MIN.) =   8.11
  LONGEST FLOWPATH FROM NODE      0.00 TO NODE    750.00 =  1261.90 FEET.

****************************************************************************
  FLOW PROCESS FROM NODE    750.00 TO NODE    750.00 IS CODE =   1
----------------------------------------------------------------------------
  >>>>>DESIGNATE INDEPENDENT STREAM FOR CONFLUENCE<<<<<
============================================================================
  TOTAL NUMBER OF STREAMS =  3
  CONFLUENCE VALUES USED FOR INDEPENDENT STREAM  2 ARE:
  TIME OF CONCENTRATION(MIN.) =   8.11
  RAINFALL INTENSITY(INCH/HR) =   4.82
  TOTAL STREAM AREA(ACRES) =     9.20
  PEAK FLOW RATE(CFS) AT CONFLUENCE =     39.70

****************************************************************************
  FLOW PROCESS FROM NODE    716.00 TO NODE    718.00 IS CODE =  21
----------------------------------------------------------------------------
  >>>>>RATIONAL METHOD INITIAL SUBAREA ANALYSIS<<<<<
============================================================================
  *USER SPECIFIED(SUBAREA):
  USER-SPECIFIED RUNOFF COEFFICIENT = .3500
  S.C.S. CURVE NUMBER (AMC II) =   0
  INITIAL SUBAREA FLOW-LENGTH(FEET) =    60.00
  UPSTREAM ELEVATION(FEET) =    551.00
  DOWNSTREAM ELEVATION(FEET) =    550.00
  ELEVATION DIFFERENCE(FEET) =      1.00
  SUBAREA OVERLAND TIME OF FLOW(MIN.) =    8.820
   100 YEAR RAINFALL INTENSITY(INCH/HOUR) =  4.568
  SUBAREA RUNOFF(CFS) =      0.48
  TOTAL AREA(ACRES) =      0.30   TOTAL RUNOFF(CFS) =      0.48

****************************************************************************
  FLOW PROCESS FROM NODE    718.00 TO NODE    720.00 IS CODE =  51
----------------------------------------------------------------------------
  >>>>>COMPUTE TRAPEZOIDAL CHANNEL FLOW<<<<<
  >>>>>TRAVELTIME THRU SUBAREA (EXISTING ELEMENT)<<<<<
============================================================================
  ELEVATION DATA: UPSTREAM(FEET) =    550.00  DOWNSTREAM(FEET) =    434.00
  CHANNEL LENGTH THRU SUBAREA(FEET) =   939.20   CHANNEL SLOPE =  0.1235
  CHANNEL BASE(FEET) =    3.00   "Z" FACTOR =   8.000
  MANNING'S FACTOR = 0.035   MAXIMUM DEPTH(FEET) =  10.00
   100 YEAR RAINFALL INTENSITY(INCH/HOUR) =  3.784
  *USER SPECIFIED(SUBAREA):
  USER-SPECIFIED RUNOFF COEFFICIENT = .3500
  S.C.S. CURVE NUMBER (AMC II) =   0
  TRAVEL TIME COMPUTED USING ESTIMATED FLOW(CFS) =      8.28
  TRAVEL TIME THRU SUBAREA BASED ON VELOCITY(FEET/SEC.) =   5.24
  AVERAGE FLOW DEPTH(FEET) =   0.29   TRAVEL TIME(MIN.) =   2.99
```

```
Tc(MIN.) =  11.81
SUBAREA AREA(ACRES) =     11.70        SUBAREA RUNOFF(CFS) =    15.50
AREA-AVERAGE RUNOFF COEFFICIENT =  0.350
TOTAL AREA(ACRES) =      12.00          PEAK FLOW RATE(CFS) =       15.89

END OF SUBAREA CHANNEL FLOW HYDRAULICS:
DEPTH(FEET) =  0.41   FLOW VELOCITY(FEET/SEC.) =   6.19
LONGEST FLOWPATH FROM NODE    716.00 TO NODE    720.00 =   999.20 FEET.

****************************************************************************
FLOW PROCESS FROM NODE    720.00 TO NODE    750.00 IS CODE =  51
----------------------------------------------------------------------------
>>>>>COMPUTE TRAPEZOIDAL CHANNEL FLOW<<<<<
>>>>>TRAVELTIME THRU SUBAREA (EXISTING ELEMENT)<<<<<
============================================================================
ELEVATION DATA: UPSTREAM(FEET) =    434.00  DOWNSTREAM(FEET) =    406.00
CHANNEL LENGTH THRU SUBAREA(FEET) =   395.00   CHANNEL SLOPE =  0.0709
CHANNEL BASE(FEET) =    9.00   "Z" FACTOR =  10.000
MANNING'S FACTOR = 0.035   MAXIMUM DEPTH(FEET) =  10.00
CHANNEL FLOW THRU SUBAREA(CFS) =     15.89
FLOW VELOCITY(FEET/SEC.) =   4.37   FLOW DEPTH(FEET) =   0.30
TRAVEL TIME(MIN.) =   1.51   Tc(MIN.) =  13.31
LONGEST FLOWPATH FROM NODE    716.00 TO NODE    750.00 =  1394.20 FEET.

****************************************************************************
FLOW PROCESS FROM NODE    750.00 TO NODE    750.00 IS CODE =   1
----------------------------------------------------------------------------
>>>>>DESIGNATE INDEPENDENT STREAM FOR CONFLUENCE<<<<<
>>>>>AND COMPUTE VARIOUS CONFLUENCED STREAM VALUES<<<<<
============================================================================
TOTAL NUMBER OF STREAMS =  3
CONFLUENCE VALUES USED FOR INDEPENDENT STREAM  3 ARE:
TIME OF CONCENTRATION(MIN.) =  13.31
RAINFALL INTENSITY(INCH/HR) =   3.50
TOTAL STREAM AREA(ACRES) =    12.00
PEAK FLOW RATE(CFS) AT CONFLUENCE =     15.89

** CONFLUENCE DATA **
STREAM     RUNOFF      Tc      INTENSITY      AREA
NUMBER      (CFS)    (MIN.)   (INCH/HOUR)    (ACRE)
    1      931.17    13.12       3.535        364.10
    2       39.70     8.11       4.821          9.20
    3       15.89    13.31       3.503         12.00

RAINFALL INTENSITY AND TIME OF CONCENTRATION RATIO
CONFLUENCE FORMULA USED FOR  3 STREAMS.

** PEAK FLOW RATE TABLE **
STREAM     RUNOFF      Tc      INTENSITY
NUMBER      (CFS)    (MIN.)   (INCH/HOUR)
    1      732.14     8.11       4.821
    2      975.95    13.12       3.535
    3      967.32    13.31       3.503

COMPUTED CONFLUENCE ESTIMATES ARE AS FOLLOWS:
PEAK FLOW RATE(CFS) =    975.95   Tc(MIN.) =   13.12
TOTAL AREA(ACRES) =    385.30
LONGEST FLOWPATH FROM NODE      0.00 TO NODE    750.00 =  1778.20 FEET.

****************************************************************************
FLOW PROCESS FROM NODE    750.00 TO NODE    795.00 IS CODE =  51
```

```
----------------------------------------------------------------------------
  >>>>>COMPUTE TRAPEZOIDAL CHANNEL FLOW<<<<<
  >>>>>TRAVELTIME THRU SUBAREA (EXISTING ELEMENT)<<<<<
============================================================================
  ELEVATION DATA: UPSTREAM(FEET) =    406.00  DOWNSTREAM(FEET) =    387.00
  CHANNEL LENGTH THRU SUBAREA(FEET) =   807.70   CHANNEL SLOPE =  0.0235
  CHANNEL BASE(FEET) =    4.00   "Z" FACTOR =   6.000
  MANNING'S FACTOR = 0.035   MAXIMUM DEPTH(FEET) =  10.00
   100 YEAR RAINFALL INTENSITY(INCH/HOUR) =  3.324
  *USER SPECIFIED(SUBAREA):
  USER-SPECIFIED RUNOFF COEFFICIENT = .3500
  S.C.S. CURVE NUMBER (AMC II) =   0
  TRAVEL TIME COMPUTED USING ESTIMATED FLOW(CFS) =    983.97
  TRAVEL TIME THRU SUBAREA BASED ON VELOCITY(FEET/SEC.) =  10.24
  AVERAGE FLOW DEPTH(FEET) =   3.68   TRAVEL TIME(MIN.) =   1.31
  Tc(MIN.) =  14.44
  SUBAREA AREA(ACRES) =    13.80       SUBAREA RUNOFF(CFS) =   16.05
  AREA-AVERAGE RUNOFF COEFFICIENT =  0.679
  TOTAL AREA(ACRES) =    399.10         PEAK FLOW RATE(CFS) =     975.95

  END OF SUBAREA CHANNEL FLOW HYDRAULICS:
  DEPTH(FEET) =  3.67   FLOW VELOCITY(FEET/SEC.) =  10.21
  LONGEST FLOWPATH FROM NODE      0.00 TO NODE    795.00 =  2585.90 FEET.

****************************************************************************
  FLOW PROCESS FROM NODE    795.00 TO NODE    795.00 IS CODE =   1
----------------------------------------------------------------------------
  >>>>>DESIGNATE INDEPENDENT STREAM FOR CONFLUENCE<<<<<
============================================================================
  TOTAL NUMBER OF STREAMS =  2
  CONFLUENCE VALUES USED FOR INDEPENDENT STREAM  1 ARE:
  TIME OF CONCENTRATION(MIN.) =  14.44
  RAINFALL INTENSITY(INCH/HR) =   3.32
  TOTAL STREAM AREA(ACRES) =   399.10
  PEAK FLOW RATE(CFS) AT CONFLUENCE =    975.95

****************************************************************************
  FLOW PROCESS FROM NODE    730.00 TO NODE    732.00 IS CODE =  21
----------------------------------------------------------------------------
  >>>>>RATIONAL METHOD INITIAL SUBAREA ANALYSIS<<<<<
============================================================================
  *USER SPECIFIED(SUBAREA):
  USER-SPECIFIED RUNOFF COEFFICIENT = .3500
  S.C.S. CURVE NUMBER (AMC II) =   0
  INITIAL SUBAREA FLOW-LENGTH(FEET) =    50.00
  UPSTREAM ELEVATION(FEET) =    526.00
  DOWNSTREAM ELEVATION(FEET) =    522.00
  ELEVATION DIFFERENCE(FEET) =      4.00
  SUBAREA OVERLAND TIME OF FLOW(MIN.) =    4.773
   100 YEAR RAINFALL INTENSITY(INCH/HOUR) =  6.587
  NOTE: RAINFALL INTENSITY IS BASED ON Tc = 5-MINUTE.
  SUBAREA RUNOFF(CFS) =      0.23
  TOTAL AREA(ACRES) =      0.10   TOTAL RUNOFF(CFS) =      0.23

****************************************************************************
  FLOW PROCESS FROM NODE    732.00 TO NODE    740.00 IS CODE =  51
----------------------------------------------------------------------------
  >>>>>COMPUTE TRAPEZOIDAL CHANNEL FLOW<<<<<
  >>>>>TRAVELTIME THRU SUBAREA (EXISTING ELEMENT)<<<<<
============================================================================
  ELEVATION DATA: UPSTREAM(FEET) =    522.00  DOWNSTREAM(FEET) =    422.00
```

```
CHANNEL LENGTH THRU SUBAREA(FEET) =   563.00   CHANNEL SLOPE =  0.1776
CHANNEL BASE(FEET) =    8.00   "Z" FACTOR =   3.000
MANNING'S FACTOR = 0.035   MAXIMUM DEPTH(FEET) =  10.00
 100 YEAR RAINFALL INTENSITY(INCH/HOUR) =  5.376
*USER SPECIFIED(SUBAREA):
USER-SPECIFIED RUNOFF COEFFICIENT = .3500
S.C.S. CURVE NUMBER (AMC II) =   0
TRAVEL TIME COMPUTED USING ESTIMATED FLOW(CFS) =      4.80
TRAVEL TIME THRU SUBAREA BASED ON VELOCITY(FEET/SEC.) =   4.52
AVERAGE FLOW DEPTH(FEET) =   0.13   TRAVEL TIME(MIN.) =   2.08
Tc(MIN.) =   6.85
SUBAREA AREA(ACRES) =     4.80       SUBAREA RUNOFF(CFS) =    9.03
AREA-AVERAGE RUNOFF COEFFICIENT =  0.350
TOTAL AREA(ACRES) =      4.90         PEAK FLOW RATE(CFS) =       9.22

END OF SUBAREA CHANNEL FLOW HYDRAULICS:
DEPTH(FEET) =  0.19   FLOW VELOCITY(FEET/SEC.) =   5.73
LONGEST FLOWPATH FROM NODE    730.00 TO NODE    740.00 =   613.00 FEET.

****************************************************************************
FLOW PROCESS FROM NODE    740.00 TO NODE    795.00 IS CODE =  51
----------------------------------------------------------------------------
>>>>>COMPUTE TRAPEZOIDAL CHANNEL FLOW<<<<<
>>>>>TRAVELTIME THRU SUBAREA (EXISTING ELEMENT)<<<<<
============================================================================
ELEVATION DATA: UPSTREAM(FEET) =    422.00  DOWNSTREAM(FEET) =    387.00
CHANNEL LENGTH THRU SUBAREA(FEET) =   408.20   CHANNEL SLOPE =  0.0857
CHANNEL BASE(FEET) =   10.00   "Z" FACTOR =   8.000
MANNING'S FACTOR = 0.035   MAXIMUM DEPTH(FEET) =  10.00
CHANNEL FLOW THRU SUBAREA(CFS) =      9.22
FLOW VELOCITY(FEET/SEC.) =   3.90   FLOW DEPTH(FEET) =   0.20
TRAVEL TIME(MIN.) =   1.74   Tc(MIN.) =   8.59
LONGEST FLOWPATH FROM NODE    730.00 TO NODE    795.00 =  1021.20 FEET.

****************************************************************************
FLOW PROCESS FROM NODE    795.00 TO NODE    795.00 IS CODE =   1
----------------------------------------------------------------------------
>>>>>DESIGNATE INDEPENDENT STREAM FOR CONFLUENCE<<<<<
>>>>>AND COMPUTE VARIOUS CONFLUENCED STREAM VALUES<<<<<
============================================================================
TOTAL NUMBER OF STREAMS =  2
CONFLUENCE VALUES USED FOR INDEPENDENT STREAM  2 ARE:
TIME OF CONCENTRATION(MIN.) =   8.59
RAINFALL INTENSITY(INCH/HR) =   4.65
TOTAL STREAM AREA(ACRES) =     4.90
PEAK FLOW RATE(CFS) AT CONFLUENCE =      9.22

** CONFLUENCE DATA **
STREAM     RUNOFF      Tc      INTENSITY      AREA
NUMBER      (CFS)    (MIN.)   (INCH/HOUR)    (ACRE)
    1      975.95    14.44       3.324        399.10
    2        9.22     8.59       4.645          4.90

RAINFALL INTENSITY AND TIME OF CONCENTRATION RATIO
CONFLUENCE FORMULA USED FOR  2 STREAMS.

** PEAK FLOW RATE TABLE **
STREAM     RUNOFF      Tc      INTENSITY
NUMBER      (CFS)    (MIN.)   (INCH/HOUR)
    1      707.61     8.59       4.645
    2      982.54    14.44       3.324
```

```
  COMPUTED CONFLUENCE ESTIMATES ARE AS FOLLOWS:
  PEAK FLOW RATE(CFS) =    982.54   Tc(MIN.) =   14.44
  TOTAL AREA(ACRES) =    404.00
  LONGEST FLOWPATH FROM NODE      0.00 TO NODE    795.00 =  2585.90 FEET.
============================================================================
  END OF STUDY SUMMARY:
  TOTAL AREA(ACRES)      =    404.00  TC(MIN.) =     14.44
  PEAK FLOW RATE(CFS)    =    982.54
============================================================================
============================================================================
  END OF RATIONAL METHOD ANALYSIS
```

```
****************************************************************************

            RATIONAL METHOD HYDROLOGY COMPUTER PROGRAM PACKAGE
            Reference: SAN DIEGO COUNTY FLOOD CONTROL DISTRICT
                          2003,1985,1981 HYDROLOGY MANUAL
         (c) Copyright 1982-2003 Advanced Engineering Software (aes)
             Ver. 1.5A Release Date: 01/01/2003  License ID 1261

                           Analysis prepared by:

                         RICK ENGINEERING COMPANY
                             5620 Friars Road
                         San Diego, California 92110
                       619-291-0707   Fax 619-291-4165

 ************************** DESCRIPTION OF STUDY **************************
* UNIVERSITY PARK AND RESEARCH CENTER (UPRC); J-16693-A                    *
* BASIN 800A; 100-YEAR, 6-HOUR                                             *
* PRE-PROJECT (RUNOFF FROM THE SDG&E SITE)                                 *
 ****************************************************************************

  FILE NAME: UP8HAE00.RAT
  TIME/DATE OF STUDY: 11:23 12/17/2013
----------------------------------------------------------------------------
  USER SPECIFIED HYDROLOGY AND HYDRAULIC MODEL INFORMATION:
----------------------------------------------------------------------------
  2003 SAN DIEGO MANUAL CRITERIA

  USER SPECIFIED STORM EVENT(YEAR) = 100.00
  6-HOUR DURATION PRECIPITATION (INCHES) =   2.500
  SPECIFIED MINIMUM PIPE SIZE(INCH) =  18.00
  SPECIFIED PERCENT OF GRADIENTS(DECIMAL) TO USE FOR FRICTION SLOPE = 0.90
  SAN DIEGO HYDROLOGY MANUAL "C"-VALUES USED FOR RATIONAL METHOD
  NOTE: USE MODIFIED RATIONAL METHOD PROCEDURES FOR CONFLUENCE ANALYSIS
  *USER-DEFINED STREET-SECTIONS FOR COUPLED PIPEFLOW AND STREETFLOW MODEL*
     HALF-  CROWN TO   STREET-CROSSFALL:   CURB  GUTTER-GEOMETRIES:  MANNING
     WIDTH  CROSSFALL  IN-  / OUT-/PARK-  HEIGHT  WIDTH  LIP   HIKE  FACTOR
NO.   (FT)     (FT)    SIDE / SIDE/ WAY    (FT)    (FT)  (FT)  (FT)    (n)
===  =====  =========  =================  ======  ===== ====== ===== =======
  1   30.0     20.0    0.018/0.018/0.020   0.67    2.00 0.0313 0.167 0.0150

  GLOBAL STREET FLOW-DEPTH CONSTRAINTS:
    1. Relative Flow-Depth =  0.00 FEET
       as (Maximum Allowable Street Flow Depth) - (Top-of-Curb)
    2. (Depth)*(Velocity) Constraint =  6.0 (FT*FT/S)
  *SIZE PIPE WITH A FLOW CAPACITY GREATER THAN
   OR EQUAL TO THE UPSTREAM TRIBUTARY PIPE.*

****************************************************************************
  FLOW PROCESS FROM NODE    802.00 TO NODE    804.00 IS CODE =  21
----------------------------------------------------------------------------
  >>>>>RATIONAL METHOD INITIAL SUBAREA ANALYSIS<<<<<
============================================================================
  *USER SPECIFIED(SUBAREA):
  USER-SPECIFIED RUNOFF COEFFICIENT = .4100
  S.C.S. CURVE NUMBER (AMC II) =   0
  INITIAL SUBAREA FLOW-LENGTH(FEET) =    80.00
  UPSTREAM ELEVATION(FEET) =    538.00
  DOWNSTREAM ELEVATION(FEET) =    530.00
  ELEVATION DIFFERENCE(FEET) =      8.00
```

```
  SUBAREA OVERLAND TIME OF FLOW(MIN.) =     5.157
  WARNING: THE MAXIMUM OVERLAND FLOW SLOPE, 10.%, IS USED IN Tc CALCULATION!
   100 YEAR RAINFALL INTENSITY(INCH/HOUR) =  6.457
  SUBAREA RUNOFF(CFS) =       0.26
  TOTAL AREA(ACRES) =       0.10   TOTAL RUNOFF(CFS) =       0.26

****************************************************************************
  FLOW PROCESS FROM NODE    804.00 TO NODE    806.00 IS CODE =  51
----------------------------------------------------------------------------
  >>>>>COMPUTE TRAPEZOIDAL CHANNEL FLOW<<<<<
  >>>>>TRAVELTIME THRU SUBAREA (EXISTING ELEMENT)<<<<<
============================================================================
  ELEVATION DATA: UPSTREAM(FEET) =    530.00  DOWNSTREAM(FEET) =    432.00
  CHANNEL LENGTH THRU SUBAREA(FEET) =   806.00   CHANNEL SLOPE =  0.1216
  CHANNEL BASE(FEET) =   13.00   "Z" FACTOR =   7.000
  MANNING'S FACTOR = 0.030   MAXIMUM DEPTH(FEET) =  10.00
   100 YEAR RAINFALL INTENSITY(INCH/HOUR) =  5.104
  *USER SPECIFIED(SUBAREA):
  USER-SPECIFIED RUNOFF COEFFICIENT = .8500
  S.C.S. CURVE NUMBER (AMC II) =   0
  TRAVEL TIME COMPUTED USING ESTIMATED FLOW(CFS) =     19.34
  TRAVEL TIME THRU SUBAREA BASED ON VELOCITY(FEET/SEC.) =   5.92
  AVERAGE FLOW DEPTH(FEET) =   0.22   TRAVEL TIME(MIN.) =   2.27
  Tc(MIN.) =   7.43
  SUBAREA AREA(ACRES) =     9.10       SUBAREA RUNOFF(CFS) =   39.48
  AREA-AVERAGE RUNOFF COEFFICIENT =  0.845
  TOTAL AREA(ACRES) =      9.20         PEAK FLOW RATE(CFS) =      39.69

  END OF SUBAREA CHANNEL FLOW HYDRAULICS:
  DEPTH(FEET) =  0.34   FLOW VELOCITY(FEET/SEC.) =   7.63
  LONGEST FLOWPATH FROM NODE    802.00 TO NODE    806.00 =   886.00 FEET.
============================================================================
  END OF STUDY SUMMARY:
  TOTAL AREA(ACRES)      =      9.20  TC(MIN.) =      7.43
  PEAK FLOW RATE(CFS)    =     39.69
============================================================================
============================================================================
  END OF RATIONAL METHOD ANALYSIS
```

```
****************************************************************************

            RATIONAL METHOD HYDROLOGY COMPUTER PROGRAM PACKAGE
            Reference: SAN DIEGO COUNTY FLOOD CONTROL DISTRICT
                         2003,1985,1981 HYDROLOGY MANUAL
         (c) Copyright 1982-2003 Advanced Engineering Software (aes)
             Ver. 1.5A Release Date: 01/01/2003  License ID 1261

                          Analysis prepared by:

                        RICK ENGINEERING COMPANY
                            5620 Friars Road
                        San Diego, California 92110
                      619-291-0707   Fax 619-291-4165

 ************************** DESCRIPTION OF STUDY **************************
* UNIVERSITY PARK AND RESEARCH CENTER (UPRC); J-16693-A                    *
* BASIN 1000; 100-YEAR, 6-HOUR                                             *
* PRE-PROJECT                                                              *
 ***************************************************************************

  FILE NAME: UP10HE00.RAT
  TIME/DATE OF STUDY: 12:09 02/09/2014
----------------------------------------------------------------------------
  USER SPECIFIED HYDROLOGY AND HYDRAULIC MODEL INFORMATION:
----------------------------------------------------------------------------
  2003 SAN DIEGO MANUAL CRITERIA

  USER SPECIFIED STORM EVENT(YEAR) = 100.00
  6-HOUR DURATION PRECIPITATION (INCHES) =   2.500
  SPECIFIED MINIMUM PIPE SIZE(INCH) =  18.00
  SPECIFIED PERCENT OF GRADIENTS(DECIMAL) TO USE FOR FRICTION SLOPE = 0.90
  SAN DIEGO HYDROLOGY MANUAL "C"-VALUES USED FOR RATIONAL METHOD
  NOTE: USE MODIFIED RATIONAL METHOD PROCEDURES FOR CONFLUENCE ANALYSIS
  *USER-DEFINED STREET-SECTIONS FOR COUPLED PIPEFLOW AND STREETFLOW MODEL*
     HALF-  CROWN TO   STREET-CROSSFALL:   CURB  GUTTER-GEOMETRIES:  MANNING
     WIDTH  CROSSFALL  IN-  / OUT-/PARK-  HEIGHT  WIDTH  LIP   HIKE  FACTOR
NO.   (FT)     (FT)    SIDE / SIDE/ WAY    (FT)    (FT)  (FT)  (FT)    (n)
===  =====  =========  =================  ======  ===== ====== ===== =======
  1   30.0     20.0    0.018/0.018/0.020   0.67    2.00 0.0313 0.167 0.0150

  GLOBAL STREET FLOW-DEPTH CONSTRAINTS:
    1. Relative Flow-Depth =  0.00 FEET
       as (Maximum Allowable Street Flow Depth) - (Top-of-Curb)
    2. (Depth)*(Velocity) Constraint =  6.0 (FT*FT/S)
  *SIZE PIPE WITH A FLOW CAPACITY GREATER THAN
   OR EQUAL TO THE UPSTREAM TRIBUTARY PIPE.*

****************************************************************************
  FLOW PROCESS FROM NODE   1002.00 TO NODE   1005.00 IS CODE =  21
----------------------------------------------------------------------------
  >>>>>RATIONAL METHOD INITIAL SUBAREA ANALYSIS<<<<<
============================================================================
  *USER SPECIFIED(SUBAREA):
  USER-SPECIFIED RUNOFF COEFFICIENT = .3500
  S.C.S. CURVE NUMBER (AMC II) =   0
  INITIAL SUBAREA FLOW-LENGTH(FEET) =    60.00
  UPSTREAM ELEVATION(FEET) =    570.90
  DOWNSTREAM ELEVATION(FEET) =    570.00
  ELEVATION DIFFERENCE(FEET) =      0.90
```

```
  SUBAREA OVERLAND TIME OF FLOW(MIN.) =     9.135
   100 YEAR RAINFALL INTENSITY(INCH/HOUR) =  4.465
  SUBAREA RUNOFF(CFS) =       0.31
  TOTAL AREA(ACRES) =       0.20   TOTAL RUNOFF(CFS) =       0.31

****************************************************************************
  FLOW PROCESS FROM NODE   1005.00 TO NODE   1010.00 IS CODE =  51
----------------------------------------------------------------------------
  >>>>>COMPUTE TRAPEZOIDAL CHANNEL FLOW<<<<<
  >>>>>TRAVELTIME THRU SUBAREA (EXISTING ELEMENT)<<<<<
============================================================================
  ELEVATION DATA: UPSTREAM(FEET) =    570.00  DOWNSTREAM(FEET) =    510.00
  CHANNEL LENGTH THRU SUBAREA(FEET) =   455.00   CHANNEL SLOPE =  0.1319
  CHANNEL BASE(FEET) =    5.00   "Z" FACTOR =   5.000
  MANNING'S FACTOR = 0.035   MAXIMUM DEPTH(FEET) =  10.00
   100 YEAR RAINFALL INTENSITY(INCH/HOUR) =  3.962
  *USER SPECIFIED(SUBAREA):
  USER-SPECIFIED RUNOFF COEFFICIENT = .3500
  S.C.S. CURVE NUMBER (AMC II) =   0
  TRAVEL TIME COMPUTED USING ESTIMATED FLOW(CFS) =       3.51
  TRAVEL TIME THRU SUBAREA BASED ON VELOCITY(FEET/SEC.) =   4.07
  AVERAGE FLOW DEPTH(FEET) =   0.15   TRAVEL TIME(MIN.) =   1.86
  Tc(MIN.) =  11.00
  SUBAREA AREA(ACRES) =     4.60       SUBAREA RUNOFF(CFS) =    6.38
  AREA-AVERAGE RUNOFF COEFFICIENT =  0.350
  TOTAL AREA(ACRES) =       4.80         PEAK FLOW RATE(CFS) =       6.66

  END OF SUBAREA CHANNEL FLOW HYDRAULICS:
  DEPTH(FEET) =  0.22   FLOW VELOCITY(FEET/SEC.) =   5.00
  LONGEST FLOWPATH FROM NODE   1002.00 TO NODE   1010.00 =   515.00 FEET.

****************************************************************************
  FLOW PROCESS FROM NODE   1010.00 TO NODE   1020.00 IS CODE =  31
----------------------------------------------------------------------------
  >>>>>COMPUTE PIPE-FLOW TRAVEL TIME THRU SUBAREA<<<<<
  >>>>>USING COMPUTER-ESTIMATED PIPESIZE (NON-PRESSURE FLOW)<<<<<
============================================================================
  ELEVATION DATA: UPSTREAM(FEET) =   510.00  DOWNSTREAM(FEET) =   509.50
  FLOW LENGTH(FEET) =    56.00   MANNING'S N =  0.013
  DEPTH OF FLOW IN  18.0 INCH PIPE IS  11.2 INCHES
  PIPE-FLOW VELOCITY(FEET/SEC.) =   5.78
  ESTIMATED PIPE DIAMETER(INCH) =  18.00    NUMBER OF PIPES =   1
  PIPE-FLOW(CFS) =       6.66
  PIPE TRAVEL TIME(MIN.) =   0.16    Tc(MIN.) =  11.16
  LONGEST FLOWPATH FROM NODE   1002.00 TO NODE   1020.00 =   571.00 FEET.
============================================================================
  END OF STUDY SUMMARY:
  TOTAL AREA(ACRES)      =       4.80  TC(MIN.) =     11.16
  PEAK FLOW RATE(CFS)    =       6.66
============================================================================
============================================================================
  END OF RATIONAL METHOD ANALYSIS
```

```
****************************************************************************

            RATIONAL METHOD HYDROLOGY COMPUTER PROGRAM PACKAGE
            Reference: SAN DIEGO COUNTY FLOOD CONTROL DISTRICT
                         2003,1985,1981 HYDROLOGY MANUAL
         (c) Copyright 1982-2003 Advanced Engineering Software (aes)
             Ver. 1.5A Release Date: 01/01/2003  License ID 1261

                          Analysis prepared by:

                        RICK ENGINEERING COMPANY
                            5620 Friars Road
                        San Diego, California 92110
                      619-291-0707   Fax 619-291-4165

 ************************** DESCRIPTION OF STUDY **************************
* UNIVERSITY PARK AND RESEARCH CENTER (UPRC); J-16693-A                    *
* BASIN 1100; 100-YEAR, 6-HOUR                                             *
* PRE-PROJECT                                                              *
 ***************************************************************************

  FILE NAME: UP11HE00.RAT
  TIME/DATE OF STUDY: 14:25 02/21/2014
----------------------------------------------------------------------------
  USER SPECIFIED HYDROLOGY AND HYDRAULIC MODEL INFORMATION:
----------------------------------------------------------------------------
  2003 SAN DIEGO MANUAL CRITERIA

  USER SPECIFIED STORM EVENT(YEAR) = 100.00
  6-HOUR DURATION PRECIPITATION (INCHES) =   2.500
  SPECIFIED MINIMUM PIPE SIZE(INCH) =  18.00
  SPECIFIED PERCENT OF GRADIENTS(DECIMAL) TO USE FOR FRICTION SLOPE = 0.90
  SAN DIEGO HYDROLOGY MANUAL "C"-VALUES USED FOR RATIONAL METHOD
  NOTE: USE MODIFIED RATIONAL METHOD PROCEDURES FOR CONFLUENCE ANALYSIS
  *USER-DEFINED STREET-SECTIONS FOR COUPLED PIPEFLOW AND STREETFLOW MODEL*
     HALF-  CROWN TO   STREET-CROSSFALL:   CURB  GUTTER-GEOMETRIES:  MANNING
     WIDTH  CROSSFALL  IN-  / OUT-/PARK-  HEIGHT  WIDTH  LIP   HIKE  FACTOR
NO.   (FT)     (FT)    SIDE / SIDE/ WAY    (FT)    (FT)  (FT)  (FT)    (n)
===  =====  =========  ================  ======  ===== ====== ===== =======
  1   30.0     20.0    0.018/0.018/0.020   0.67    2.00 0.0313 0.167 0.0150

  GLOBAL STREET FLOW-DEPTH CONSTRAINTS:
    1. Relative Flow-Depth =  0.00 FEET
       as (Maximum Allowable Street Flow Depth) - (Top-of-Curb)
    2. (Depth)*(Velocity) Constraint =  6.0 (FT*FT/S)
  *SIZE PIPE WITH A FLOW CAPACITY GREATER THAN
   OR EQUAL TO THE UPSTREAM TRIBUTARY PIPE.*

****************************************************************************
  FLOW PROCESS FROM NODE   1102.00 TO NODE   1105.00 IS CODE =  21
----------------------------------------------------------------------------
  >>>>>RATIONAL METHOD INITIAL SUBAREA ANALYSIS<<<<<
============================================================================
  *USER SPECIFIED(SUBAREA):
  USER-SPECIFIED RUNOFF COEFFICIENT = .3500
  S.C.S. CURVE NUMBER (AMC II) =   0
  INITIAL SUBAREA FLOW-LENGTH(FEET) =    70.00
  UPSTREAM ELEVATION(FEET) =    510.00
  DOWNSTREAM ELEVATION(FEET) =    509.00
  ELEVATION DIFFERENCE(FEET) =      1.00
```

```
  SUBAREA OVERLAND TIME OF FLOW(MIN.) =    10.029
   100 YEAR RAINFALL INTENSITY(INCH/HOUR) =  4.204
  SUBAREA RUNOFF(CFS) =       0.88
  TOTAL AREA(ACRES) =       0.60   TOTAL RUNOFF(CFS) =       0.88

****************************************************************************
  FLOW PROCESS FROM NODE   1105.00 TO NODE   1110.00 IS CODE =  51
----------------------------------------------------------------------------
  >>>>>COMPUTE TRAPEZOIDAL CHANNEL FLOW<<<<<
  >>>>>TRAVELTIME THRU SUBAREA (EXISTING ELEMENT)<<<<<
============================================================================
  ELEVATION DATA: UPSTREAM(FEET) =    509.00  DOWNSTREAM(FEET) =    506.00
  CHANNEL LENGTH THRU SUBAREA(FEET) =   262.00   CHANNEL SLOPE =  0.0115
  CHANNEL BASE(FEET) =    2.00   "Z" FACTOR =   2.000
  MANNING'S FACTOR = 0.030   MAXIMUM DEPTH(FEET) =  10.00
   100 YEAR RAINFALL INTENSITY(INCH/HOUR) =  3.801
  *USER SPECIFIED(SUBAREA):
  USER-SPECIFIED RUNOFF COEFFICIENT = .3500
  S.C.S. CURVE NUMBER (AMC II) =   0
  TRAVEL TIME COMPUTED USING ESTIMATED FLOW(CFS) =       3.62
  TRAVEL TIME THRU SUBAREA BASED ON VELOCITY(FEET/SEC.) =   2.58
  AVERAGE FLOW DEPTH(FEET) =   0.48   TRAVEL TIME(MIN.) =   1.70
  Tc(MIN.) =  11.72
  SUBAREA AREA(ACRES) =     4.10       SUBAREA RUNOFF(CFS) =    5.46
  AREA-AVERAGE RUNOFF COEFFICIENT =  0.350
  TOTAL AREA(ACRES) =       4.70        PEAK FLOW RATE(CFS) =       6.25

  END OF SUBAREA CHANNEL FLOW HYDRAULICS:
  DEPTH(FEET) =  0.64   FLOW VELOCITY(FEET/SEC.) =   3.00
  LONGEST FLOWPATH FROM NODE   1102.00 TO NODE   1110.00 =   332.00 FEET.

****************************************************************************
  FLOW PROCESS FROM NODE   1110.00 TO NODE   1120.00 IS CODE =  31
----------------------------------------------------------------------------
  >>>>>COMPUTE PIPE-FLOW TRAVEL TIME THRU SUBAREA<<<<<
  >>>>>USING COMPUTER-ESTIMATED PIPESIZE (NON-PRESSURE FLOW)<<<<<
============================================================================
  ELEVATION DATA: UPSTREAM(FEET) =   506.00  DOWNSTREAM(FEET) =   505.60
  FLOW LENGTH(FEET) =    50.00   MANNING'S N =  0.013
  DEPTH OF FLOW IN  18.0 INCH PIPE IS  11.1 INCHES
  PIPE-FLOW VELOCITY(FEET/SEC.) =   5.46
  ESTIMATED PIPE DIAMETER(INCH) =  18.00    NUMBER OF PIPES =   1
  PIPE-FLOW(CFS) =      6.25
  PIPE TRAVEL TIME(MIN.) =   0.15    Tc(MIN.) =  11.88
  LONGEST FLOWPATH FROM NODE   1102.00 TO NODE   1120.00 =   382.00 FEET.

****************************************************************************
  FLOW PROCESS FROM NODE   1120.00 TO NODE   1190.00 IS CODE =  51
----------------------------------------------------------------------------
  >>>>>COMPUTE TRAPEZOIDAL CHANNEL FLOW<<<<<
  >>>>>TRAVELTIME THRU SUBAREA (EXISTING ELEMENT)<<<<<
============================================================================
  ELEVATION DATA: UPSTREAM(FEET) =    496.00  DOWNSTREAM(FEET) =    494.00
  CHANNEL LENGTH THRU SUBAREA(FEET) =   396.00   CHANNEL SLOPE =  0.0051
  CHANNEL BASE(FEET) =    2.00   "Z" FACTOR =   5.000
  MANNING'S FACTOR = 0.040   MAXIMUM DEPTH(FEET) =  10.00
   100 YEAR RAINFALL INTENSITY(INCH/HOUR) =  3.090
  *USER SPECIFIED(SUBAREA):
  USER-SPECIFIED RUNOFF COEFFICIENT = .6300
  S.C.S. CURVE NUMBER (AMC II) =   0
  TRAVEL TIME COMPUTED USING ESTIMATED FLOW(CFS) =       6.64
```

```
  TRAVEL TIME THRU SUBAREA BASED ON VELOCITY(FEET/SEC.) =    1.54
  AVERAGE FLOW DEPTH(FEET) =    0.75    TRAVEL TIME(MIN.) =    4.29
  Tc(MIN.) =  16.17
  SUBAREA AREA(ACRES) =      0.40        SUBAREA RUNOFF(CFS) =     0.78
  AREA-AVERAGE RUNOFF COEFFICIENT =  0.372
  TOTAL AREA(ACRES) =       5.10          PEAK FLOW RATE(CFS) =        6.25

  END OF SUBAREA CHANNEL FLOW HYDRAULICS:
  DEPTH(FEET) =  0.73    FLOW VELOCITY(FEET/SEC.) =    1.52
  LONGEST FLOWPATH FROM NODE    1102.00 TO NODE    1190.00 =    778.00 FEET.

****************************************************************************
  FLOW PROCESS FROM NODE    1190.00 TO NODE    1190.00 IS CODE =  10
----------------------------------------------------------------------------
  >>>>>MAIN-STREAM MEMORY COPIED ONTO MEMORY BANK # 1 <<<<<
============================================================================

****************************************************************************
  FLOW PROCESS FROM NODE    1135.00 TO NODE    1140.00 IS CODE =  21
----------------------------------------------------------------------------
  >>>>>RATIONAL METHOD INITIAL SUBAREA ANALYSIS<<<<<
============================================================================
  *USER SPECIFIED(SUBAREA):
  USER-SPECIFIED RUNOFF COEFFICIENT = .3500
  S.C.S. CURVE NUMBER (AMC II) =  0
  INITIAL SUBAREA FLOW-LENGTH(FEET) =     60.00
  UPSTREAM ELEVATION(FEET) =     516.00
  DOWNSTREAM ELEVATION(FEET) =     514.50
  ELEVATION DIFFERENCE(FEET) =       1.50
  SUBAREA OVERLAND TIME OF FLOW(MIN.) =     7.705
   100 YEAR RAINFALL INTENSITY(INCH/HOUR) =  4.984
  SUBAREA RUNOFF(CFS) =       0.87
  TOTAL AREA(ACRES) =       0.50    TOTAL RUNOFF(CFS) =       0.87

****************************************************************************
  FLOW PROCESS FROM NODE    1140.00 TO NODE    1150.00 IS CODE =  51
----------------------------------------------------------------------------
  >>>>>COMPUTE TRAPEZOIDAL CHANNEL FLOW<<<<<
  >>>>>TRAVELTIME THRU SUBAREA (EXISTING ELEMENT)<<<<<
============================================================================
  ELEVATION DATA: UPSTREAM(FEET) =     514.50  DOWNSTREAM(FEET) =     504.00
  CHANNEL LENGTH THRU SUBAREA(FEET) =    500.00    CHANNEL SLOPE =  0.0210
  CHANNEL BASE(FEET) =     2.00    "Z" FACTOR =    3.000
  MANNING'S FACTOR = 0.030    MAXIMUM DEPTH(FEET) =  10.00
   100 YEAR RAINFALL INTENSITY(INCH/HOUR) =  4.091
  *USER SPECIFIED(SUBAREA):
  USER-SPECIFIED RUNOFF COEFFICIENT = .3500
  S.C.S. CURVE NUMBER (AMC II) =   0
  TRAVEL TIME COMPUTED USING ESTIMATED FLOW(CFS) =       3.68
  TRAVEL TIME THRU SUBAREA BASED ON VELOCITY(FEET/SEC.) =    3.02
  AVERAGE FLOW DEPTH(FEET) =    0.39    TRAVEL TIME(MIN.) =    2.76
  Tc(MIN.) =  10.46
  SUBAREA AREA(ACRES) =      3.90        SUBAREA RUNOFF(CFS) =     5.58
  AREA-AVERAGE RUNOFF COEFFICIENT =  0.350
  TOTAL AREA(ACRES) =       4.40          PEAK FLOW RATE(CFS) =        6.30

  END OF SUBAREA CHANNEL FLOW HYDRAULICS:
  DEPTH(FEET) =  0.51    FLOW VELOCITY(FEET/SEC.) =    3.52
  LONGEST FLOWPATH FROM NODE    1135.00 TO NODE    1150.00 =    560.00 FEET.

****************************************************************************
```

```
  FLOW PROCESS FROM NODE   1150.00 TO NODE   1150.00 IS CODE =  81
----------------------------------------------------------------------------
  >>>>>ADDITION OF SUBAREA TO MAINLINE PEAK FLOW<<<<<
============================================================================
   100 YEAR RAINFALL INTENSITY(INCH/HOUR) =  4.091
  *USER SPECIFIED(SUBAREA):
  USER-SPECIFIED RUNOFF COEFFICIENT = .3500
  S.C.S. CURVE NUMBER (AMC II) =   0
  AREA-AVERAGE RUNOFF COEFFICIENT = 0.3500
  SUBAREA AREA(ACRES) =     2.80   SUBAREA RUNOFF(CFS) =     4.01
  TOTAL AREA(ACRES) =       7.20   TOTAL RUNOFF(CFS) =    10.31
  TC(MIN.) =  10.46

****************************************************************************
  FLOW PROCESS FROM NODE   1150.00 TO NODE   1190.00 IS CODE =  31
----------------------------------------------------------------------------
  >>>>>COMPUTE PIPE-FLOW TRAVEL TIME THRU SUBAREA<<<<<
  >>>>>USING COMPUTER-ESTIMATED PIPESIZE (NON-PRESSURE FLOW)<<<<<
============================================================================
  ELEVATION DATA: UPSTREAM(FEET) =   504.00  DOWNSTREAM(FEET) =   503.00
  FLOW LENGTH(FEET) =    75.00   MANNING'S N =  0.013
  DEPTH OF FLOW IN  18.0 INCH PIPE IS  13.3 INCHES
  PIPE-FLOW VELOCITY(FEET/SEC.) =   7.37
  ESTIMATED PIPE DIAMETER(INCH) =  18.00    NUMBER OF PIPES =   1
  PIPE-FLOW(CFS) =     10.31
  PIPE TRAVEL TIME(MIN.) =   0.17    Tc(MIN.) =  10.63
  LONGEST FLOWPATH FROM NODE   1135.00 TO NODE   1190.00 =   635.00 FEET.

****************************************************************************
  FLOW PROCESS FROM NODE   1190.00 TO NODE   1190.00 IS CODE =  11
----------------------------------------------------------------------------
  >>>>>CONFLUENCE MEMORY BANK # 1 WITH THE MAIN-STREAM MEMORY<<<<<
============================================================================

  ** MAIN STREAM CONFLUENCE DATA **
  STREAM     RUNOFF     Tc      INTENSITY     AREA
  NUMBER      (CFS)   (MIN.)   (INCH/HOUR)   (ACRE)
     1       10.31    10.63       4.048        7.20
  LONGEST FLOWPATH FROM NODE   1135.00 TO NODE   1190.00 =   635.00 FEET.

  ** MEMORY BANK #  1 CONFLUENCE DATA **
  STREAM     RUNOFF     Tc      INTENSITY     AREA
  NUMBER      (CFS)   (MIN.)   (INCH/HOUR)   (ACRE)
     1        6.25    16.17       3.090        5.10
  LONGEST FLOWPATH FROM NODE   1102.00 TO NODE   1190.00 =   778.00 FEET.

  ** PEAK FLOW RATE TABLE **
  STREAM    RUNOFF       Tc      INTENSITY
  NUMBER     (CFS)     (MIN.)   (INCH/HOUR)
     1      14.42      10.63       4.048
     2      14.12      16.17       3.090

  COMPUTED CONFLUENCE ESTIMATES ARE AS FOLLOWS:
  PEAK FLOW RATE(CFS) =     14.42   Tc(MIN.) =   10.63
  TOTAL AREA(ACRES) =     12.30

****************************************************************************
  FLOW PROCESS FROM NODE   1190.00 TO NODE   1190.00 IS CODE =  12
----------------------------------------------------------------------------
  >>>>>CLEAR MEMORY BANK # 1 <<<<<
============================================================================
```

```
============================================================================
  END OF STUDY SUMMARY:
  TOTAL AREA(ACRES)        =      12.30  TC(MIN.) =      10.63
  PEAK FLOW RATE(CFS)      =      14.42
============================================================================
============================================================================
  END OF RATIONAL METHOD ANALYSIS
```

```
****************************************************************************

          RATIONAL METHOD HYDROLOGY COMPUTER PROGRAM PACKAGE
          Reference: SAN DIEGO COUNTY FLOOD CONTROL DISTRICT
                       2003,1985,1981 HYDROLOGY MANUAL
        (c) Copyright 1982-2003 Advanced Engineering Software (aes)
            Ver. 1.5A Release Date: 01/01/2003  License ID 1261

                          Analysis prepared by:

                        RICK ENGINEERING COMPANY
                            5620 Friars Road
                       San Diego, California 92110
                     619-291-0707   Fax 619-291-4165

 ************************** DESCRIPTION OF STUDY **************************
* UNIVERSITY PARK AND RESEARCH CENTER (UPRC); J-16693-A                    *
* BASIN 1200; 100-YEAR, 6-HOUR                                             *
* PRE-PROJECT                                                              *
 ***************************************************************************

  FILE NAME: UP12HE00.RAT
  TIME/DATE OF STUDY: 14:17 02/21/2014
---------------------------------------------------------------------------
  USER SPECIFIED HYDROLOGY AND HYDRAULIC MODEL INFORMATION:
---------------------------------------------------------------------------
  2003 SAN DIEGO MANUAL CRITERIA

  USER SPECIFIED STORM EVENT(YEAR) = 100.00
  6-HOUR DURATION PRECIPITATION (INCHES) =   2.500
  SPECIFIED MINIMUM PIPE SIZE(INCH) =  18.00
  SPECIFIED PERCENT OF GRADIENTS(DECIMAL) TO USE FOR FRICTION SLOPE = 0.90
  SAN DIEGO HYDROLOGY MANUAL "C"-VALUES USED FOR RATIONAL METHOD
  NOTE: USE MODIFIED RATIONAL METHOD PROCEDURES FOR CONFLUENCE ANALYSIS
  *USER-DEFINED STREET-SECTIONS FOR COUPLED PIPEFLOW AND STREETFLOW MODEL*
     HALF-  CROWN TO   STREET-CROSSFALL:   CURB  GUTTER-GEOMETRIES:  MANNING
     WIDTH  CROSSFALL  IN-  / OUT-/PARK-  HEIGHT  WIDTH  LIP   HIKE  FACTOR
NO.   (FT)     (FT)    SIDE / SIDE/ WAY    (FT)    (FT)  (FT)  (FT)    (n)
===  =====  =========  =================  ======  =====  ======  =====  =======
  1   30.0     20.0    0.018/0.018/0.020   0.67    2.00 0.0313 0.167 0.0150

  GLOBAL STREET FLOW-DEPTH CONSTRAINTS:
    1. Relative Flow-Depth =  0.00 FEET
       as (Maximum Allowable Street Flow Depth) - (Top-of-Curb)
    2. (Depth)*(Velocity) Constraint =  6.0 (FT*FT/S)
  *SIZE PIPE WITH A FLOW CAPACITY GREATER THAN
   OR EQUAL TO THE UPSTREAM TRIBUTARY PIPE.*

****************************************************************************
  FLOW PROCESS FROM NODE   1202.00 TO NODE   1205.00 IS CODE =  21
---------------------------------------------------------------------------
  >>>>>RATIONAL METHOD INITIAL SUBAREA ANALYSIS<<<<<
===========================================================================
  *USER SPECIFIED(SUBAREA):
  USER-SPECIFIED RUNOFF COEFFICIENT = .3500
  S.C.S. CURVE NUMBER (AMC II) =   0
  INITIAL SUBAREA FLOW-LENGTH(FEET) =   100.00
  UPSTREAM ELEVATION(FEET) =    520.00
  DOWNSTREAM ELEVATION(FEET) =    510.00
  ELEVATION DIFFERENCE(FEET) =     10.00
```

```
  SUBAREA OVERLAND TIME OF FLOW(MIN.) =     6.267
  WARNING: THE MAXIMUM OVERLAND FLOW SLOPE, 10.%, IS USED IN Tc CALCULATION!
   100 YEAR RAINFALL INTENSITY(INCH/HOUR) =  5.694
  SUBAREA RUNOFF(CFS) =       0.60
  TOTAL AREA(ACRES) =       0.30   TOTAL RUNOFF(CFS) =       0.60

****************************************************************************
  FLOW PROCESS FROM NODE   1205.00 TO NODE   1245.00 IS CODE =  51
----------------------------------------------------------------------------
  >>>>>COMPUTE TRAPEZOIDAL CHANNEL FLOW<<<<<
  >>>>>TRAVELTIME THRU SUBAREA (EXISTING ELEMENT)<<<<<
============================================================================
  ELEVATION DATA: UPSTREAM(FEET) =     510.00  DOWNSTREAM(FEET) =     506.00
  CHANNEL LENGTH THRU SUBAREA(FEET) =   425.00   CHANNEL SLOPE =  0.0094
  CHANNEL BASE(FEET) =     2.00   "Z" FACTOR =   3.000
  MANNING'S FACTOR = 0.030   MAXIMUM DEPTH(FEET) =  10.00
   100 YEAR RAINFALL INTENSITY(INCH/HOUR) =  4.344
  *USER SPECIFIED(SUBAREA):
  USER-SPECIFIED RUNOFF COEFFICIENT = .3500
  S.C.S. CURVE NUMBER (AMC II) =   0
  TRAVEL TIME COMPUTED USING ESTIMATED FLOW(CFS) =       3.22
  TRAVEL TIME THRU SUBAREA BASED ON VELOCITY(FEET/SEC.) =   2.17
  AVERAGE FLOW DEPTH(FEET) =   0.45   TRAVEL TIME(MIN.) =   3.27
  Tc(MIN.) =   9.53
  SUBAREA AREA(ACRES) =      3.40       SUBAREA RUNOFF(CFS) =     5.17
  AREA-AVERAGE RUNOFF COEFFICIENT =  0.350
  TOTAL AREA(ACRES) =       3.70         PEAK FLOW RATE(CFS) =       5.63

  END OF SUBAREA CHANNEL FLOW HYDRAULICS:
  DEPTH(FEET) =  0.58   FLOW VELOCITY(FEET/SEC.) =   2.56
  LONGEST FLOWPATH FROM NODE   1202.00 TO NODE   1245.00 =   525.00 FEET.

****************************************************************************
  FLOW PROCESS FROM NODE   1245.00 TO NODE   1250.00 IS CODE =  51
----------------------------------------------------------------------------
  >>>>>COMPUTE TRAPEZOIDAL CHANNEL FLOW<<<<<
  >>>>>TRAVELTIME THRU SUBAREA (EXISTING ELEMENT)<<<<<
============================================================================
  ELEVATION DATA: UPSTREAM(FEET) =     506.00  DOWNSTREAM(FEET) =     504.00
  CHANNEL LENGTH THRU SUBAREA(FEET) =   120.00   CHANNEL SLOPE =  0.0167
  CHANNEL BASE(FEET) =     3.00   "Z" FACTOR =   5.000
  MANNING'S FACTOR = 0.040   MAXIMUM DEPTH(FEET) =  10.00
   100 YEAR RAINFALL INTENSITY(INCH/HOUR) =  4.108
  *USER SPECIFIED(SUBAREA):
  USER-SPECIFIED RUNOFF COEFFICIENT = .3500
  S.C.S. CURVE NUMBER (AMC II) =   0
  TRAVEL TIME COMPUTED USING ESTIMATED FLOW(CFS) =       6.20
  TRAVEL TIME THRU SUBAREA BASED ON VELOCITY(FEET/SEC.) =   2.31
  AVERAGE FLOW DEPTH(FEET) =   0.49   TRAVEL TIME(MIN.) =   0.86
  Tc(MIN.) =  10.40
  SUBAREA AREA(ACRES) =      0.80       SUBAREA RUNOFF(CFS) =     1.15
  AREA-AVERAGE RUNOFF COEFFICIENT =  0.350
  TOTAL AREA(ACRES) =       4.50         PEAK FLOW RATE(CFS) =       6.47

  END OF SUBAREA CHANNEL FLOW HYDRAULICS:
  DEPTH(FEET) =  0.50   FLOW VELOCITY(FEET/SEC.) =   2.35
  LONGEST FLOWPATH FROM NODE   1202.00 TO NODE   1250.00 =   645.00 FEET.

****************************************************************************
  FLOW PROCESS FROM NODE   1250.00 TO NODE   1290.00 IS CODE =  31
----------------------------------------------------------------------------
```

```
>>>>>COMPUTE PIPE-FLOW TRAVEL TIME THRU SUBAREA<<<<<
>>>>>USING COMPUTER-ESTIMATED PIPESIZE (NON-PRESSURE FLOW)<<<<<
============================================================================
ELEVATION DATA: UPSTREAM(FEET) =   502.00  DOWNSTREAM(FEET) =   494.00
FLOW LENGTH(FEET) =    85.00   MANNING'S N =  0.013
ESTIMATED PIPE DIAMETER(INCH) INCREASED TO 18.000
DEPTH OF FLOW IN  18.0 INCH PIPE IS   5.6 INCHES
PIPE-FLOW VELOCITY(FEET/SEC.) =  13.73
ESTIMATED PIPE DIAMETER(INCH) =  18.00    NUMBER OF PIPES =   1
PIPE-FLOW(CFS) =      6.47
PIPE TRAVEL TIME(MIN.) =   0.10    Tc(MIN.) =  10.50
LONGEST FLOWPATH FROM NODE   1202.00 TO NODE   1290.00 =  730.00 FEET.
============================================================================
END OF STUDY SUMMARY:
TOTAL AREA(ACRES)      =      4.50  TC(MIN.) =     10.50
PEAK FLOW RATE(CFS)    =      6.47
============================================================================
============================================================================
END OF RATIONAL METHOD ANALYSIS
```

APPENDIX B

Modified Rational Method Analyses (100-year, 6-hour)
[Post-Project]

```
****************************************************************************

            RATIONAL METHOD HYDROLOGY COMPUTER PROGRAM PACKAGE
            Reference: SAN DIEGO COUNTY FLOOD CONTROL DISTRICT
                         2003,1985,1981 HYDROLOGY MANUAL
         (c) Copyright 1982-2003 Advanced Engineering Software (aes)
             Ver. 1.5A Release Date: 01/01/2003  License ID 1261

                          Analysis prepared by:

                        RICK ENGINEERING COMPANY
                            5620 Friars Road
                        San Diego, California 92110
                     619-291-0707   Fax 619-291-4165

 ************************** DESCRIPTION OF STUDY **************************
* UNIVERSITY PARK AND RESEARCH CENTER (UPRC); J-16693-A                    *
* BASIN 100; 100-YEAR, 6-HOUR                                              *
* POST-PROJECT (PHASE I)                                                   *
 ***************************************************************************

  FILE NAME: UP1HP00.RAT
  TIME/DATE OF STUDY: 22:38 02/15/2014
----------------------------------------------------------------------------
  USER SPECIFIED HYDROLOGY AND HYDRAULIC MODEL INFORMATION:
----------------------------------------------------------------------------
  2003 SAN DIEGO MANUAL CRITERIA

  USER SPECIFIED STORM EVENT(YEAR) = 100.00
  6-HOUR DURATION PRECIPITATION (INCHES) =   2.500
  SPECIFIED MINIMUM PIPE SIZE(INCH) =  18.00
  SPECIFIED PERCENT OF GRADIENTS(DECIMAL) TO USE FOR FRICTION SLOPE = 0.90
  SAN DIEGO HYDROLOGY MANUAL "C"-VALUES USED FOR RATIONAL METHOD
  NOTE: USE MODIFIED RATIONAL METHOD PROCEDURES FOR CONFLUENCE ANALYSIS
  *USER-DEFINED STREET-SECTIONS FOR COUPLED PIPEFLOW AND STREETFLOW MODEL*
     HALF-  CROWN TO   STREET-CROSSFALL:   CURB  GUTTER-GEOMETRIES:  MANNING
     WIDTH  CROSSFALL  IN-  / OUT-/PARK-  HEIGHT  WIDTH  LIP   HIKE  FACTOR
NO.   (FT)     (FT)    SIDE / SIDE/ WAY    (FT)    (FT)  (FT)  (FT)    (n)
===  =====  =========  =================  ======  ===== ====== ===== =======
  1   30.0     20.0    0.018/0.018/0.020   0.67    2.00 0.0313 0.167 0.0150

  GLOBAL STREET FLOW-DEPTH CONSTRAINTS:
    1. Relative Flow-Depth =  0.00 FEET
       as (Maximum Allowable Street Flow Depth) - (Top-of-Curb)
    2. (Depth)*(Velocity) Constraint =  6.0 (FT*FT/S)
  *SIZE PIPE WITH A FLOW CAPACITY GREATER THAN
   OR EQUAL TO THE UPSTREAM TRIBUTARY PIPE.*

****************************************************************************
  FLOW PROCESS FROM NODE    100.00 TO NODE    102.00 IS CODE =  21
----------------------------------------------------------------------------
  >>>>>RATIONAL METHOD INITIAL SUBAREA ANALYSIS<<<<<
============================================================================
  *USER SPECIFIED(SUBAREA):
  USER-SPECIFIED RUNOFF COEFFICIENT = .8500
  S.C.S. CURVE NUMBER (AMC II) =   0
  INITIAL SUBAREA FLOW-LENGTH(FEET) =    90.00
  UPSTREAM ELEVATION(FEET) =    540.00
  DOWNSTREAM ELEVATION(FEET) =    535.00
  ELEVATION DIFFERENCE(FEET) =      5.00
```

```
  SUBAREA OVERLAND TIME OF FLOW(MIN.) =     2.411
   100 YEAR RAINFALL INTENSITY(INCH/HOUR) =  6.587
  NOTE: RAINFALL INTENSITY IS BASED ON Tc = 5-MINUTE.
  SUBAREA RUNOFF(CFS) =       3.36
  TOTAL AREA(ACRES) =       0.60   TOTAL RUNOFF(CFS) =       3.36

****************************************************************************
  FLOW PROCESS FROM NODE    102.00 TO NODE    111.00 IS CODE =  31
----------------------------------------------------------------------------
  >>>>>COMPUTE PIPE-FLOW TRAVEL TIME THRU SUBAREA<<<<<
  >>>>>USING COMPUTER-ESTIMATED PIPESIZE (NON-PRESSURE FLOW)<<<<<
============================================================================
  ELEVATION DATA: UPSTREAM(FEET) =   529.00  DOWNSTREAM(FEET) =   426.00
  FLOW LENGTH(FEET) =  2427.00   MANNING'S N =  0.013
  ESTIMATED PIPE DIAMETER(INCH) INCREASED TO 18.000
  DEPTH OF FLOW IN  18.0 INCH PIPE IS   4.9 INCHES
  PIPE-FLOW VELOCITY(FEET/SEC.) =   8.56
  ESTIMATED PIPE DIAMETER(INCH) =  18.00    NUMBER OF PIPES =   1
  PIPE-FLOW(CFS) =       3.36
  PIPE TRAVEL TIME(MIN.) =   4.73    Tc(MIN.) =   7.14
  LONGEST FLOWPATH FROM NODE    100.00 TO NODE    111.00 =  2517.00 FEET.

****************************************************************************
  FLOW PROCESS FROM NODE    111.00 TO NODE    111.00 IS CODE =  81
----------------------------------------------------------------------------
  >>>>>ADDITION OF SUBAREA TO MAINLINE PEAK FLOW<<<<<
============================================================================
   100 YEAR RAINFALL INTENSITY(INCH/HOUR) =  5.236
  *USER SPECIFIED(SUBAREA):
  USER-SPECIFIED RUNOFF COEFFICIENT = .8500
  S.C.S. CURVE NUMBER (AMC II) =   0
  AREA-AVERAGE RUNOFF COEFFICIENT = 0.8500
  SUBAREA AREA(ACRES) =   70.70   SUBAREA RUNOFF(CFS) =  314.68
  TOTAL AREA(ACRES) =     71.30   TOTAL RUNOFF(CFS) =  317.35
  TC(MIN.) =   7.14

****************************************************************************
  FLOW PROCESS FROM NODE    111.00 TO NODE    112.00 IS CODE =  31
----------------------------------------------------------------------------
  >>>>>COMPUTE PIPE-FLOW TRAVEL TIME THRU SUBAREA<<<<<
  >>>>>USING COMPUTER-ESTIMATED PIPESIZE (NON-PRESSURE FLOW)<<<<<
============================================================================
  ELEVATION DATA: UPSTREAM(FEET) =   426.00  DOWNSTREAM(FEET) =   424.80
  FLOW LENGTH(FEET) =   122.60   MANNING'S N =  0.013
  DEPTH OF FLOW IN  69.0 INCH PIPE IS  50.9 INCHES
  PIPE-FLOW VELOCITY(FEET/SEC.) =  15.45
  ESTIMATED PIPE DIAMETER(INCH) =  69.00    NUMBER OF PIPES =   1
  PIPE-FLOW(CFS) =    317.35
  PIPE TRAVEL TIME(MIN.) =   0.13    Tc(MIN.) =   7.27
  LONGEST FLOWPATH FROM NODE    100.00 TO NODE    112.00 =  2639.60 FEET.

****************************************************************************
  FLOW PROCESS FROM NODE    112.00 TO NODE    112.00 IS CODE =  81
----------------------------------------------------------------------------
  >>>>>ADDITION OF SUBAREA TO MAINLINE PEAK FLOW<<<<<
============================================================================
   100 YEAR RAINFALL INTENSITY(INCH/HOUR) =  5.175
  *USER SPECIFIED(SUBAREA):
  USER-SPECIFIED RUNOFF COEFFICIENT = .8700
  S.C.S. CURVE NUMBER (AMC II) =   0
  AREA-AVERAGE RUNOFF COEFFICIENT = 0.8511
```

```
  SUBAREA AREA(ACRES) =     4.00   SUBAREA RUNOFF(CFS) =    18.01
  TOTAL AREA(ACRES) =      75.30   TOTAL RUNOFF(CFS) =   331.62
  TC(MIN.) =    7.27
================================================================================
  END OF STUDY SUMMARY:
  TOTAL AREA(ACRES)       =      75.30  TC(MIN.) =       7.27
  PEAK FLOW RATE(CFS)     =     331.62
================================================================================
================================================================================
  END OF RATIONAL METHOD ANALYSIS
```

```
****************************************************************************

            RATIONAL METHOD HYDROLOGY COMPUTER PROGRAM PACKAGE
            Reference: SAN DIEGO COUNTY FLOOD CONTROL DISTRICT
                          2003,1985,1981 HYDROLOGY MANUAL
         (c) Copyright 1982-2003 Advanced Engineering Software (aes)
             Ver. 1.5A Release Date: 01/01/2003  License ID 1261

                           Analysis prepared by:

                         RICK ENGINEERING COMPANY
                             5620 Friars Road
                        San Diego, California 92110
                      619-291-0707   Fax 619-291-4165

 ************************** DESCRIPTION OF STUDY **************************
* UNIVERSITY PARK AND RESEARCH CENTER (UPRC); J-16693-A                    *
* BASIN 200; 100-YEAR, 6-HOUR                                              *
* POST-PROJECT (PHASE II)                                                  *
 ***************************************************************************

  FILE NAME: UP2HP00.RAT
  TIME/DATE OF STUDY: 22:48 02/15/2014
---------------------------------------------------------------------------
  USER SPECIFIED HYDROLOGY AND HYDRAULIC MODEL INFORMATION:
---------------------------------------------------------------------------
  2003 SAN DIEGO MANUAL CRITERIA

  USER SPECIFIED STORM EVENT(YEAR) = 100.00
  6-HOUR DURATION PRECIPITATION (INCHES) =   2.500
  SPECIFIED MINIMUM PIPE SIZE(INCH) =  18.00
  SPECIFIED PERCENT OF GRADIENTS(DECIMAL) TO USE FOR FRICTION SLOPE = 0.90
  SAN DIEGO HYDROLOGY MANUAL "C"-VALUES USED FOR RATIONAL METHOD
  NOTE: USE MODIFIED RATIONAL METHOD PROCEDURES FOR CONFLUENCE ANALYSIS
  *USER-DEFINED STREET-SECTIONS FOR COUPLED PIPEFLOW AND STREETFLOW MODEL*
     HALF-  CROWN TO   STREET-CROSSFALL:   CURB  GUTTER-GEOMETRIES:  MANNING
     WIDTH  CROSSFALL  IN-  / OUT-/PARK-  HEIGHT  WIDTH  LIP   HIKE  FACTOR
NO.   (FT)     (FT)    SIDE / SIDE/ WAY    (FT)    (FT)  (FT)  (FT)    (n)
===  =====  =========  =================  ======  ===== ====== ===== =======
  1   30.0     20.0    0.018/0.018/0.020   0.67    2.00 0.0313 0.167 0.0150

  GLOBAL STREET FLOW-DEPTH CONSTRAINTS:
    1. Relative Flow-Depth =  0.00 FEET
       as (Maximum Allowable Street Flow Depth) - (Top-of-Curb)
    2. (Depth)*(Velocity) Constraint =  6.0 (FT*FT/S)
  *SIZE PIPE WITH A FLOW CAPACITY GREATER THAN
   OR EQUAL TO THE UPSTREAM TRIBUTARY PIPE.*

****************************************************************************
  FLOW PROCESS FROM NODE    200.00 TO NODE    202.00 IS CODE =  21
---------------------------------------------------------------------------
  >>>>>RATIONAL METHOD INITIAL SUBAREA ANALYSIS<<<<<
============================================================================
  *USER SPECIFIED(SUBAREA):
  USER-SPECIFIED RUNOFF COEFFICIENT = .8500
  S.C.S. CURVE NUMBER (AMC II) =   0
  INITIAL SUBAREA FLOW-LENGTH(FEET) =    90.00
  UPSTREAM ELEVATION(FEET) =    555.00
  DOWNSTREAM ELEVATION(FEET) =    550.00
  ELEVATION DIFFERENCE(FEET) =      5.00
```

```
  SUBAREA OVERLAND TIME OF FLOW(MIN.) =     2.411
   100 YEAR RAINFALL INTENSITY(INCH/HOUR) =  6.587
  NOTE: RAINFALL INTENSITY IS BASED ON Tc = 5-MINUTE.
  SUBAREA RUNOFF(CFS) =       1.12
  TOTAL AREA(ACRES) =       0.20   TOTAL RUNOFF(CFS) =       1.12

****************************************************************************
  FLOW PROCESS FROM NODE    202.00 TO NODE    206.00 IS CODE =  31
----------------------------------------------------------------------------
  >>>>>COMPUTE PIPE-FLOW TRAVEL TIME THRU SUBAREA<<<<<
  >>>>>USING COMPUTER-ESTIMATED PIPESIZE (NON-PRESSURE FLOW)<<<<<
============================================================================
  ELEVATION DATA: UPSTREAM(FEET) =   544.00  DOWNSTREAM(FEET) =   399.00
  FLOW LENGTH(FEET) =  2580.00   MANNING'S N =  0.013
  ESTIMATED PIPE DIAMETER(INCH) INCREASED TO 18.000
  DEPTH OF FLOW IN  18.0 INCH PIPE IS   2.7 INCHES
  PIPE-FLOW VELOCITY(FEET/SEC.) =   6.88
  ESTIMATED PIPE DIAMETER(INCH) =  18.00    NUMBER OF PIPES =   1
  PIPE-FLOW(CFS) =       1.12
  PIPE TRAVEL TIME(MIN.) =   6.25    Tc(MIN.) =   8.66
  LONGEST FLOWPATH FROM NODE    200.00 TO NODE    206.00 =  2670.00 FEET.

****************************************************************************
  FLOW PROCESS FROM NODE    206.00 TO NODE    206.00 IS CODE =  81
----------------------------------------------------------------------------
  >>>>>ADDITION OF SUBAREA TO MAINLINE PEAK FLOW<<<<<
============================================================================
   100 YEAR RAINFALL INTENSITY(INCH/HOUR) =  4.621
  *USER SPECIFIED(SUBAREA):
  USER-SPECIFIED RUNOFF COEFFICIENT = .8500
  S.C.S. CURVE NUMBER (AMC II) =   0
  AREA-AVERAGE RUNOFF COEFFICIENT = 0.8500
  SUBAREA AREA(ACRES) =   69.60   SUBAREA RUNOFF(CFS) =  273.37
  TOTAL AREA(ACRES) =     69.80   TOTAL RUNOFF(CFS) =  274.15
  TC(MIN.) =   8.66

****************************************************************************
  FLOW PROCESS FROM NODE    206.00 TO NODE    207.00 IS CODE =  31
----------------------------------------------------------------------------
  >>>>>COMPUTE PIPE-FLOW TRAVEL TIME THRU SUBAREA<<<<<
  >>>>>USING COMPUTER-ESTIMATED PIPESIZE (NON-PRESSURE FLOW)<<<<<
============================================================================
  ELEVATION DATA: UPSTREAM(FEET) =   399.00  DOWNSTREAM(FEET) =   397.20
  FLOW LENGTH(FEET) =   179.10   MANNING'S N =  0.013
  DEPTH OF FLOW IN  63.0 INCH PIPE IS  50.1 INCHES
  PIPE-FLOW VELOCITY(FEET/SEC.) =  14.85
  ESTIMATED PIPE DIAMETER(INCH) =  63.00    NUMBER OF PIPES =   1
  PIPE-FLOW(CFS) =     274.15
  PIPE TRAVEL TIME(MIN.) =   0.20    Tc(MIN.) =   8.86
  LONGEST FLOWPATH FROM NODE    200.00 TO NODE    207.00 =  2849.10 FEET.

****************************************************************************
  FLOW PROCESS FROM NODE    207.00 TO NODE    207.00 IS CODE =   1
----------------------------------------------------------------------------
  >>>>>DESIGNATE INDEPENDENT STREAM FOR CONFLUENCE<<<<<
============================================================================
  TOTAL NUMBER OF STREAMS =  2
  CONFLUENCE VALUES USED FOR INDEPENDENT STREAM  1 ARE:
  TIME OF CONCENTRATION(MIN.) =   8.86
  RAINFALL INTENSITY(INCH/HR) =   4.55
  TOTAL STREAM AREA(ACRES) =    69.80
```

```
  PEAK FLOW RATE(CFS) AT CONFLUENCE =     274.15

+----------------------------------------------------------------------------+
| Q(100) = 155 CFS; A = 53.2 AC; TC = 8.9 MIN                                |
| RUNOFF FROM PORTION OF MILLENIA AND PORTION OF OTAY RANCH VILLAGE 11       |
| PER STUDIES DONE BY RICK ENGINEERING COMPANY AND HUNSAKER & ASSOCIATES     |
+----------------------------------------------------------------------------+

****************************************************************************
  FLOW PROCESS FROM NODE    203.00 TO NODE    203.00 IS CODE =   7
----------------------------------------------------------------------------
  >>>>>USER SPECIFIED HYDROLOGY INFORMATION AT NODE<<<<<
============================================================================
  USER-SPECIFIED VALUES ARE AS FOLLOWS:
  TC(MIN) =    8.90   RAIN INTENSITY(INCH/HOUR) =  4.54
  TOTAL AREA(ACRES) =     53.20   TOTAL RUNOFF(CFS) =     155.00

****************************************************************************
  FLOW PROCESS FROM NODE    203.00 TO NODE    207.00 IS CODE =  31
----------------------------------------------------------------------------
  >>>>>COMPUTE PIPE-FLOW TRAVEL TIME THRU SUBAREA<<<<<
  >>>>>USING COMPUTER-ESTIMATED PIPESIZE (NON-PRESSURE FLOW)<<<<<
============================================================================
  ELEVATION DATA: UPSTREAM(FEET) =   552.00  DOWNSTREAM(FEET) =   397.20
  FLOW LENGTH(FEET) =  2200.00   MANNING'S N =  0.013
  DEPTH OF FLOW IN  36.0 INCH PIPE IS  27.3 INCHES
  PIPE-FLOW VELOCITY(FEET/SEC.) =  26.95
  ESTIMATED PIPE DIAMETER(INCH) =  36.00    NUMBER OF PIPES =   1
  PIPE-FLOW(CFS) =     155.00
  PIPE TRAVEL TIME(MIN.) =   1.36    Tc(MIN.) =  10.26
  LONGEST FLOWPATH FROM NODE      0.00 TO NODE    207.00 =  2200.00 FEET.

****************************************************************************
  FLOW PROCESS FROM NODE    207.00 TO NODE    207.00 IS CODE =  81
----------------------------------------------------------------------------
  >>>>>ADDITION OF SUBAREA TO MAINLINE PEAK FLOW<<<<<
============================================================================
   100 YEAR RAINFALL INTENSITY(INCH/HOUR) =  4.143
  *USER SPECIFIED(SUBAREA):
  USER-SPECIFIED RUNOFF COEFFICIENT = .8700
  S.C.S. CURVE NUMBER (AMC II) =   0
  AREA-AVERAGE RUNOFF COEFFICIENT = 0.6623
  SUBAREA AREA(ACRES) =     5.30   SUBAREA RUNOFF(CFS) =   19.10
  TOTAL AREA(ACRES) =      58.50   TOTAL RUNOFF(CFS) =  160.51
  TC(MIN.) =  10.26

****************************************************************************
  FLOW PROCESS FROM NODE    207.00 TO NODE    207.00 IS CODE =   1
----------------------------------------------------------------------------
  >>>>>DESIGNATE INDEPENDENT STREAM FOR CONFLUENCE<<<<<
  >>>>>AND COMPUTE VARIOUS CONFLUENCED STREAM VALUES<<<<<
============================================================================
  TOTAL NUMBER OF STREAMS =  2
  CONFLUENCE VALUES USED FOR INDEPENDENT STREAM  2 ARE:
  TIME OF CONCENTRATION(MIN.) =  10.26
  RAINFALL INTENSITY(INCH/HR) =   4.14
  TOTAL STREAM AREA(ACRES) =    58.50
  PEAK FLOW RATE(CFS) AT CONFLUENCE =     160.51

  ** CONFLUENCE DATA **
  STREAM     RUNOFF      Tc      INTENSITY      AREA
```

```
NUMBER       (CFS)     (MIN.)    (INCH/HOUR)     (ACRE)
    1       274.15     8.86        4.553          69.80
    2       160.51    10.26        4.143          58.50

RAINFALL INTENSITY AND TIME OF CONCENTRATION RATIO
CONFLUENCE FORMULA USED FOR  2 STREAMS.

** PEAK FLOW RATE TABLE **
STREAM      RUNOFF       Tc       INTENSITY
NUMBER       (CFS)     (MIN.)    (INCH/HOUR)
    1       412.82     8.86        4.553
    2       409.98    10.26        4.143

COMPUTED CONFLUENCE ESTIMATES ARE AS FOLLOWS:
PEAK FLOW RATE(CFS) =    412.82   Tc(MIN.) =     8.86
TOTAL AREA(ACRES) =    128.30
LONGEST FLOWPATH FROM NODE    200.00 TO NODE    207.00 =  2849.10 FEET.

****************************************************************************
FLOW PROCESS FROM NODE    207.00 TO NODE    228.00 IS CODE =  31
----------------------------------------------------------------------------
>>>>>COMPUTE PIPE-FLOW TRAVEL TIME THRU SUBAREA<<<<<
>>>>>USING COMPUTER-ESTIMATED PIPESIZE (NON-PRESSURE FLOW)<<<<<
============================================================================
ELEVATION DATA: UPSTREAM(FEET) =   397.20  DOWNSTREAM(FEET) =   389.00
FLOW LENGTH(FEET) =   420.00   MANNING'S N =  0.013
DEPTH OF FLOW IN  66.0 INCH PIPE IS  50.2 INCHES
PIPE-FLOW VELOCITY(FEET/SEC.) =  21.28
ESTIMATED PIPE DIAMETER(INCH) =  66.00    NUMBER OF PIPES =   1
PIPE-FLOW(CFS) =    412.82
PIPE TRAVEL TIME(MIN.) =   0.33    Tc(MIN.) =    9.19
LONGEST FLOWPATH FROM NODE    200.00 TO NODE    228.00 =  3269.10 FEET.

****************************************************************************
FLOW PROCESS FROM NODE    228.00 TO NODE    228.00 IS CODE =  81
----------------------------------------------------------------------------
>>>>>ADDITION OF SUBAREA TO MAINLINE PEAK FLOW<<<<<
============================================================================
 100 YEAR RAINFALL INTENSITY(INCH/HOUR) =  4.447
*USER SPECIFIED(SUBAREA):
USER-SPECIFIED RUNOFF COEFFICIENT = .8700
S.C.S. CURVE NUMBER (AMC II) =   0
AREA-AVERAGE RUNOFF COEFFICIENT = 0.7716
SUBAREA AREA(ACRES) =    9.40   SUBAREA RUNOFF(CFS) =   36.37
TOTAL AREA(ACRES) =    137.70   TOTAL RUNOFF(CFS) =  472.52
TC(MIN.) =   9.19
============================================================================
END OF STUDY SUMMARY:
TOTAL AREA(ACRES)      =    137.70  TC(MIN.) =      9.19
PEAK FLOW RATE(CFS)    =    472.52
============================================================================
============================================================================
END OF RATIONAL METHOD ANALYSIS
```

```
****************************************************************************

            RATIONAL METHOD HYDROLOGY COMPUTER PROGRAM PACKAGE
            Reference: SAN DIEGO COUNTY FLOOD CONTROL DISTRICT
                         2003,1985,1981 HYDROLOGY MANUAL
         (c) Copyright 1982-2003 Advanced Engineering Software (aes)
             Ver. 1.5A Release Date: 01/01/2003  License ID 1261

                          Analysis prepared by:

                        RICK ENGINEERING COMPANY
                            5620 Friars Road
                        San Diego, California 92110
                      619-291-0707   Fax 619-291-4165

 ************************** DESCRIPTION OF STUDY **************************
* UNIVERSITY PARK AND RESEARCH CENTER (UPRC); J-16693-A                    *
* BASIN 300; 100-YEAR, 6-HOUR                                              *
* POST-PROJECT (PHASE III)                                                 *
 ***************************************************************************

  FILE NAME: UP3HP00.RAT
  TIME/DATE OF STUDY: 16:29 02/20/2014
----------------------------------------------------------------------------
  USER SPECIFIED HYDROLOGY AND HYDRAULIC MODEL INFORMATION:
----------------------------------------------------------------------------
  2003 SAN DIEGO MANUAL CRITERIA

  USER SPECIFIED STORM EVENT(YEAR) = 100.00
  6-HOUR DURATION PRECIPITATION (INCHES) =   2.500
  SPECIFIED MINIMUM PIPE SIZE(INCH) =  18.00
  SPECIFIED PERCENT OF GRADIENTS(DECIMAL) TO USE FOR FRICTION SLOPE = 0.90
  SAN DIEGO HYDROLOGY MANUAL "C"-VALUES USED FOR RATIONAL METHOD
  NOTE: USE MODIFIED RATIONAL METHOD PROCEDURES FOR CONFLUENCE ANALYSIS
  *USER-DEFINED STREET-SECTIONS FOR COUPLED PIPEFLOW AND STREETFLOW MODEL*
     HALF-  CROWN TO   STREET-CROSSFALL:   CURB  GUTTER-GEOMETRIES:  MANNING
     WIDTH  CROSSFALL  IN-  / OUT-/PARK-  HEIGHT  WIDTH  LIP   HIKE  FACTOR
NO.   (FT)     (FT)    SIDE / SIDE/ WAY    (FT)    (FT)  (FT)  (FT)    (n)
===  =====  =========  =================  ======  ===== ====== ===== =======
  1   30.0     20.0    0.018/0.018/0.020   0.67    2.00 0.0313 0.167 0.0150

  GLOBAL STREET FLOW-DEPTH CONSTRAINTS:
    1. Relative Flow-Depth =  0.00 FEET
       as (Maximum Allowable Street Flow Depth) - (Top-of-Curb)
    2. (Depth)*(Velocity) Constraint =  6.0 (FT*FT/S)
  *SIZE PIPE WITH A FLOW CAPACITY GREATER THAN
   OR EQUAL TO THE UPSTREAM TRIBUTARY PIPE.*

****************************************************************************
  FLOW PROCESS FROM NODE    301.00 TO NODE    302.00 IS CODE =  21
----------------------------------------------------------------------------
  >>>>>RATIONAL METHOD INITIAL SUBAREA ANALYSIS<<<<<
============================================================================
  *USER SPECIFIED(SUBAREA):
  USER-SPECIFIED RUNOFF COEFFICIENT = .8500
  S.C.S. CURVE NUMBER (AMC II) =   0
  INITIAL SUBAREA FLOW-LENGTH(FEET) =    50.00
  UPSTREAM ELEVATION(FEET) =    540.00
  DOWNSTREAM ELEVATION(FEET) =    539.00
  ELEVATION DIFFERENCE(FEET) =      1.00
```

```
  SUBAREA OVERLAND TIME OF FLOW(MIN.) =     2.526
   100 YEAR RAINFALL INTENSITY(INCH/HOUR) =  6.587
  NOTE: RAINFALL INTENSITY IS BASED ON Tc = 5-MINUTE.
  SUBAREA RUNOFF(CFS) =       2.24
  TOTAL AREA(ACRES) =       0.40   TOTAL RUNOFF(CFS) =       2.24

****************************************************************************
  FLOW PROCESS FROM NODE    302.00 TO NODE    303.00 IS CODE =  31
----------------------------------------------------------------------------
  >>>>>COMPUTE PIPE-FLOW TRAVEL TIME THRU SUBAREA<<<<<
  >>>>>USING COMPUTER-ESTIMATED PIPESIZE (NON-PRESSURE FLOW)<<<<<
============================================================================
  ELEVATION DATA: UPSTREAM(FEET) =   520.00  DOWNSTREAM(FEET) =   495.00
  FLOW LENGTH(FEET) =  1200.00   MANNING'S N =  0.013
  ESTIMATED PIPE DIAMETER(INCH) INCREASED TO 18.000
  DEPTH OF FLOW IN  18.0 INCH PIPE IS   4.8 INCHES
  PIPE-FLOW VELOCITY(FEET/SEC.) =   5.91
  ESTIMATED PIPE DIAMETER(INCH) =  18.00    NUMBER OF PIPES =   1
  PIPE-FLOW(CFS) =       2.24
  PIPE TRAVEL TIME(MIN.) =   3.38    Tc(MIN.) =   5.91
  LONGEST FLOWPATH FROM NODE    301.00 TO NODE    303.00 =  1250.00 FEET.

****************************************************************************
  FLOW PROCESS FROM NODE    303.00 TO NODE    303.00 IS CODE =  81
----------------------------------------------------------------------------
  >>>>>ADDITION OF SUBAREA TO MAINLINE PEAK FLOW<<<<<
============================================================================
   100 YEAR RAINFALL INTENSITY(INCH/HOUR) =  5.915
  *USER SPECIFIED(SUBAREA):
  USER-SPECIFIED RUNOFF COEFFICIENT = .8500
  S.C.S. CURVE NUMBER (AMC II) =   0
  AREA-AVERAGE RUNOFF COEFFICIENT = 0.8500
  SUBAREA AREA(ACRES) =     4.60   SUBAREA RUNOFF(CFS) =   23.13
  TOTAL AREA(ACRES) =       5.00   TOTAL RUNOFF(CFS) =   25.14
  TC(MIN.) =   5.91

****************************************************************************
  FLOW PROCESS FROM NODE    303.00 TO NODE    303.00 IS CODE =   1
----------------------------------------------------------------------------
  >>>>>DESIGNATE INDEPENDENT STREAM FOR CONFLUENCE<<<<<
============================================================================
  TOTAL NUMBER OF STREAMS =  2
  CONFLUENCE VALUES USED FOR INDEPENDENT STREAM  1 ARE:
  TIME OF CONCENTRATION(MIN.) =   5.91
  RAINFALL INTENSITY(INCH/HR) =   5.91
  TOTAL STREAM AREA(ACRES) =     5.00
  PEAK FLOW RATE(CFS) AT CONFLUENCE =     25.14

+--------------------------------------------------------------------------+
| Q(100) = 7.4 CFS (+/-); A = 11.0 AC (+/-); TC = 18 MIN (+/-)             |
| RUNOFF ESTIMATED FOR APPROXIMATE 11.0-ACRE HIGH TECH HIGH SITE           |
| BASED ON DRAINAGE STUDY BY RBF CONSULTING                                |
+--------------------------------------------------------------------------+

****************************************************************************
  FLOW PROCESS FROM NODE    300.00 TO NODE    300.00 IS CODE =   7
----------------------------------------------------------------------------
  >>>>>USER SPECIFIED HYDROLOGY INFORMATION AT NODE<<<<<
============================================================================
  USER-SPECIFIED VALUES ARE AS FOLLOWS:
  TC(MIN) =  18.00   RAIN INTENSITY(INCH/HOUR) =  2.88
```

```
  TOTAL AREA(ACRES) =     11.00   TOTAL RUNOFF(CFS) =       7.40

****************************************************************************
  FLOW PROCESS FROM NODE    303.00 TO NODE    303.00 IS CODE =   1
----------------------------------------------------------------------------
  >>>>>DESIGNATE INDEPENDENT STREAM FOR CONFLUENCE<<<<<
  >>>>>AND COMPUTE VARIOUS CONFLUENCED STREAM VALUES<<<<<
============================================================================
  TOTAL NUMBER OF STREAMS =  2
  CONFLUENCE VALUES USED FOR INDEPENDENT STREAM  2 ARE:
  TIME OF CONCENTRATION(MIN.) =  18.00
  RAINFALL INTENSITY(INCH/HR) =   2.88
  TOTAL STREAM AREA(ACRES) =    11.00
  PEAK FLOW RATE(CFS) AT CONFLUENCE =       7.40

  ** CONFLUENCE DATA **
  STREAM     RUNOFF      Tc      INTENSITY      AREA
  NUMBER      (CFS)    (MIN.)   (INCH/HOUR)    (ACRE)
     1       25.14     5.91        5.915         5.00
     2        7.40    18.00        2.883        11.00

  RAINFALL INTENSITY AND TIME OF CONCENTRATION RATIO
  CONFLUENCE FORMULA USED FOR  2 STREAMS.

  ** PEAK FLOW RATE TABLE **
  STREAM     RUNOFF      Tc      INTENSITY
  NUMBER      (CFS)    (MIN.)   (INCH/HOUR)
     1       27.57     5.91       5.915
     2       19.65    18.00       2.883

  COMPUTED CONFLUENCE ESTIMATES ARE AS FOLLOWS:
  PEAK FLOW RATE(CFS) =     27.57   Tc(MIN.) =    5.91
  TOTAL AREA(ACRES) =     16.00
  LONGEST FLOWPATH FROM NODE    301.00 TO NODE    303.00 =  1250.00 FEET.

****************************************************************************
  FLOW PROCESS FROM NODE    303.00 TO NODE    315.00 IS CODE =  31
----------------------------------------------------------------------------
  >>>>>COMPUTE PIPE-FLOW TRAVEL TIME THRU SUBAREA<<<<<
  >>>>>USING COMPUTER-ESTIMATED PIPESIZE (NON-PRESSURE FLOW)<<<<<
============================================================================
  ELEVATION DATA: UPSTREAM(FEET) =   495.00  DOWNSTREAM(FEET) =   463.00
  FLOW LENGTH(FEET) =  3070.00   MANNING'S N =  0.013
  DEPTH OF FLOW IN  27.0 INCH PIPE IS  20.4 INCHES
  PIPE-FLOW VELOCITY(FEET/SEC.) =   8.56
  ESTIMATED PIPE DIAMETER(INCH) =  27.00    NUMBER OF PIPES =   1
  PIPE-FLOW(CFS) =     27.57
  PIPE TRAVEL TIME(MIN.) =   5.98    Tc(MIN.) =  11.89
  LONGEST FLOWPATH FROM NODE    301.00 TO NODE    315.00 =  4320.00 FEET.

****************************************************************************
  FLOW PROCESS FROM NODE    300.00 TO NODE    315.00 IS CODE =  81
----------------------------------------------------------------------------
  >>>>>ADDITION OF SUBAREA TO MAINLINE PEAK FLOW<<<<<
============================================================================
   100 YEAR RAINFALL INTENSITY(INCH/HOUR) =  3.768
  *USER SPECIFIED(SUBAREA):
  USER-SPECIFIED RUNOFF COEFFICIENT = .8500
  S.C.S. CURVE NUMBER (AMC II) =   0
  AREA-AVERAGE RUNOFF COEFFICIENT = 0.7662
  SUBAREA AREA(ACRES) =   64.90   SUBAREA RUNOFF(CFS) =  207.86
```

```
  TOTAL AREA(ACRES) =      80.90   TOTAL RUNOFF(CFS) =  233.54
  TC(MIN.) =  11.89
================================================================================
  END OF STUDY SUMMARY:
  TOTAL AREA(ACRES)      =     80.90  TC(MIN.) =     11.89
  PEAK FLOW RATE(CFS)    =    233.54
================================================================================
================================================================================
  END OF RATIONAL METHOD ANALYSIS
```

```
****************************************************************************

            RATIONAL METHOD HYDROLOGY COMPUTER PROGRAM PACKAGE
            Reference: SAN DIEGO COUNTY FLOOD CONTROL DISTRICT
                         2003,1985,1981 HYDROLOGY MANUAL
         (c) Copyright 1982-2003 Advanced Engineering Software (aes)
             Ver. 1.5A Release Date: 01/01/2003  License ID 1261

                          Analysis prepared by:

                        RICK ENGINEERING COMPANY
                            5620 Friars Road
                        San Diego, California 92110
                     619-291-0707   Fax 619-291-4165

 ************************* DESCRIPTION OF STUDY *************************
* UNIVERSITY PARK AND RESEARCH CENTER (UPRC); J-16693-A                  *
* BASIN 400; 100-YEAR, 6-HOUR                                            *
* POST-PROJECT (PHASE III)                                               *
 ************************************************************************

  FILE NAME: UP4HP00.RAT
  TIME/DATE OF STUDY: 10:28 12/26/2013
----------------------------------------------------------------------------
  USER SPECIFIED HYDROLOGY AND HYDRAULIC MODEL INFORMATION:
----------------------------------------------------------------------------
  2003 SAN DIEGO MANUAL CRITERIA

  USER SPECIFIED STORM EVENT(YEAR) = 100.00
  6-HOUR DURATION PRECIPITATION (INCHES) =   2.500
  SPECIFIED MINIMUM PIPE SIZE(INCH) =  18.00
  SPECIFIED PERCENT OF GRADIENTS(DECIMAL) TO USE FOR FRICTION SLOPE = 0.90
  SAN DIEGO HYDROLOGY MANUAL "C"-VALUES USED FOR RATIONAL METHOD
  NOTE: USE MODIFIED RATIONAL METHOD PROCEDURES FOR CONFLUENCE ANALYSIS
  *USER-DEFINED STREET-SECTIONS FOR COUPLED PIPEFLOW AND STREETFLOW MODEL*
     HALF-  CROWN TO   STREET-CROSSFALL:   CURB  GUTTER-GEOMETRIES:  MANNING
     WIDTH  CROSSFALL  IN-  / OUT-/PARK-  HEIGHT  WIDTH  LIP   HIKE  FACTOR
NO.   (FT)     (FT)    SIDE / SIDE/ WAY    (FT)    (FT)  (FT)  (FT)    (n)
===  =====  =========  =================  ======  ===== ====== ===== =======
  1   30.0     20.0    0.018/0.018/0.020   0.67    2.00 0.0313 0.167 0.0150

  GLOBAL STREET FLOW-DEPTH CONSTRAINTS:
    1. Relative Flow-Depth =  0.00 FEET
       as (Maximum Allowable Street Flow Depth) - (Top-of-Curb)
    2. (Depth)*(Velocity) Constraint =  6.0 (FT*FT/S)
  *SIZE PIPE WITH A FLOW CAPACITY GREATER THAN
   OR EQUAL TO THE UPSTREAM TRIBUTARY PIPE.*

****************************************************************************
  FLOW PROCESS FROM NODE    400.00 TO NODE    402.00 IS CODE =  21
----------------------------------------------------------------------------
  >>>>>RATIONAL METHOD INITIAL SUBAREA ANALYSIS<<<<<
============================================================================
  *USER SPECIFIED(SUBAREA):
  USER-SPECIFIED RUNOFF COEFFICIENT = .8500
  S.C.S. CURVE NUMBER (AMC II) =   0
  INITIAL SUBAREA FLOW-LENGTH(FEET) =    60.00
  UPSTREAM ELEVATION(FEET) =    488.00
  DOWNSTREAM ELEVATION(FEET) =    487.40
  ELEVATION DIFFERENCE(FEET) =      0.60
```

```
  SUBAREA OVERLAND TIME OF FLOW(MIN.) =     3.486
   100 YEAR RAINFALL INTENSITY(INCH/HOUR) =  6.587
  NOTE: RAINFALL INTENSITY IS BASED ON Tc = 5-MINUTE.
  SUBAREA RUNOFF(CFS) =       0.56
  TOTAL AREA(ACRES) =       0.10   TOTAL RUNOFF(CFS) =       0.56

****************************************************************************
  FLOW PROCESS FROM NODE    402.00 TO NODE    410.00 IS CODE =  31
----------------------------------------------------------------------------
  >>>>>COMPUTE PIPE-FLOW TRAVEL TIME THRU SUBAREA<<<<<
  >>>>>USING COMPUTER-ESTIMATED PIPESIZE (NON-PRESSURE FLOW)<<<<<
============================================================================
  ELEVATION DATA: UPSTREAM(FEET) =   481.40  DOWNSTREAM(FEET) =   464.40
  FLOW LENGTH(FEET) =  1865.00   MANNING'S N =  0.013
  ESTIMATED PIPE DIAMETER(INCH) INCREASED TO 18.000
  DEPTH OF FLOW IN  18.0 INCH PIPE IS   3.0 INCHES
  PIPE-FLOW VELOCITY(FEET/SEC.) =   2.94
  ESTIMATED PIPE DIAMETER(INCH) =  18.00    NUMBER OF PIPES =   1
  PIPE-FLOW(CFS) =       0.56
  PIPE TRAVEL TIME(MIN.) =  10.57    Tc(MIN.) =  14.05
  LONGEST FLOWPATH FROM NODE    400.00 TO NODE    410.00 =  1925.00 FEET.

****************************************************************************
  FLOW PROCESS FROM NODE    402.00 TO NODE    410.00 IS CODE =  81
----------------------------------------------------------------------------
  >>>>>ADDITION OF SUBAREA TO MAINLINE PEAK FLOW<<<<<
============================================================================
   100 YEAR RAINFALL INTENSITY(INCH/HOUR) =  3.382
  *USER SPECIFIED(SUBAREA):
  USER-SPECIFIED RUNOFF COEFFICIENT = .8500
  S.C.S. CURVE NUMBER (AMC II) =   0
  AREA-AVERAGE RUNOFF COEFFICIENT = 0.8500
  SUBAREA AREA(ACRES) =   27.50   SUBAREA RUNOFF(CFS) =   79.06
  TOTAL AREA(ACRES) =     27.60   TOTAL RUNOFF(CFS) =   79.34
  TC(MIN.) =  14.05
============================================================================
  END OF STUDY SUMMARY:
  TOTAL AREA(ACRES)      =     27.60  TC(MIN.) =     14.05
  PEAK FLOW RATE(CFS)    =     79.34
============================================================================
============================================================================
  END OF RATIONAL METHOD ANALYSIS
```

```
****************************************************************************

          RATIONAL METHOD HYDROLOGY COMPUTER PROGRAM PACKAGE
          Reference: SAN DIEGO COUNTY FLOOD CONTROL DISTRICT
                       2003,1985,1981 HYDROLOGY MANUAL
       (c) Copyright 1982-2003 Advanced Engineering Software (aes)
           Ver. 1.5A Release Date: 01/01/2003  License ID 1261

                          Analysis prepared by:

                        RICK ENGINEERING COMPANY
                            5620 Friars Road
                        San Diego, California 92110
                     619-291-0707   Fax 619-291-4165

 ************************** DESCRIPTION OF STUDY **************************
* UNIVERSITY PARK AND RESEARCH CENTER (UPRC); J-16693-A                    *
* BASIN 500; 100-YEAR, 6-HOUR                                              *
* POST-PROJECT (PHASE III)                                                 *
 ***************************************************************************

  FILE NAME: UP5HP00.RAT
  TIME/DATE OF STUDY: 10:31 12/26/2013
----------------------------------------------------------------------------
  USER SPECIFIED HYDROLOGY AND HYDRAULIC MODEL INFORMATION:
----------------------------------------------------------------------------
  2003 SAN DIEGO MANUAL CRITERIA

  USER SPECIFIED STORM EVENT(YEAR) = 100.00
  6-HOUR DURATION PRECIPITATION (INCHES) =   2.500
  SPECIFIED MINIMUM PIPE SIZE(INCH) =  18.00
  SPECIFIED PERCENT OF GRADIENTS(DECIMAL) TO USE FOR FRICTION SLOPE = 0.90
  SAN DIEGO HYDROLOGY MANUAL "C"-VALUES USED FOR RATIONAL METHOD
  NOTE: USE MODIFIED RATIONAL METHOD PROCEDURES FOR CONFLUENCE ANALYSIS
  *USER-DEFINED STREET-SECTIONS FOR COUPLED PIPEFLOW AND STREETFLOW MODEL*
     HALF-  CROWN TO   STREET-CROSSFALL:   CURB  GUTTER-GEOMETRIES:  MANNING
     WIDTH  CROSSFALL  IN-  / OUT-/PARK-  HEIGHT  WIDTH  LIP   HIKE  FACTOR
NO.   (FT)     (FT)    SIDE / SIDE/ WAY    (FT)    (FT)  (FT)  (FT)    (n)
===  =====  =========  =================  ======  ===== ====== ===== =======
  1   30.0     20.0    0.018/0.018/0.020   0.67    2.00 0.0313 0.167 0.0150

  GLOBAL STREET FLOW-DEPTH CONSTRAINTS:
    1. Relative Flow-Depth =  0.00 FEET
       as (Maximum Allowable Street Flow Depth) - (Top-of-Curb)
    2. (Depth)*(Velocity) Constraint =  6.0 (FT*FT/S)
  *SIZE PIPE WITH A FLOW CAPACITY GREATER THAN
   OR EQUAL TO THE UPSTREAM TRIBUTARY PIPE.*

****************************************************************************
  FLOW PROCESS FROM NODE    500.00 TO NODE    502.00 IS CODE =  21
----------------------------------------------------------------------------
  >>>>>RATIONAL METHOD INITIAL SUBAREA ANALYSIS<<<<<
============================================================================
  *USER SPECIFIED(SUBAREA):
  USER-SPECIFIED RUNOFF COEFFICIENT = .8500
  S.C.S. CURVE NUMBER (AMC II) =   0
  INITIAL SUBAREA FLOW-LENGTH(FEET) =    60.00
  UPSTREAM ELEVATION(FEET) =    478.00
  DOWNSTREAM ELEVATION(FEET) =    477.10
  ELEVATION DIFFERENCE(FEET) =      0.90
```

```
  SUBAREA OVERLAND TIME OF FLOW(MIN.) =     3.045
   100 YEAR RAINFALL INTENSITY(INCH/HOUR) =  6.587
  NOTE: RAINFALL INTENSITY IS BASED ON Tc = 5-MINUTE.
  SUBAREA RUNOFF(CFS) =       0.56
  TOTAL AREA(ACRES) =       0.10   TOTAL RUNOFF(CFS) =       0.56

****************************************************************************
  FLOW PROCESS FROM NODE    502.00 TO NODE    504.00 IS CODE =  31
----------------------------------------------------------------------------
  >>>>>COMPUTE PIPE-FLOW TRAVEL TIME THRU SUBAREA<<<<<
  >>>>>USING COMPUTER-ESTIMATED PIPESIZE (NON-PRESSURE FLOW)<<<<<
============================================================================
  ELEVATION DATA: UPSTREAM(FEET) =   471.10  DOWNSTREAM(FEET) =   464.20
  FLOW LENGTH(FEET) =   674.30   MANNING'S N =  0.013
  ESTIMATED PIPE DIAMETER(INCH) INCREASED TO 18.000
  DEPTH OF FLOW IN  18.0 INCH PIPE IS   2.9 INCHES
  PIPE-FLOW VELOCITY(FEET/SEC.) =   3.07
  ESTIMATED PIPE DIAMETER(INCH) =  18.00    NUMBER OF PIPES =   1
  PIPE-FLOW(CFS) =       0.56
  PIPE TRAVEL TIME(MIN.) =   3.66    Tc(MIN.) =   6.70
  LONGEST FLOWPATH FROM NODE    500.00 TO NODE    504.00 =   734.30 FEET.

****************************************************************************
  FLOW PROCESS FROM NODE    502.00 TO NODE    504.00 IS CODE =  81
----------------------------------------------------------------------------
  >>>>>ADDITION OF SUBAREA TO MAINLINE PEAK FLOW<<<<<
============================================================================
   100 YEAR RAINFALL INTENSITY(INCH/HOUR) =  5.452
  *USER SPECIFIED(SUBAREA):
  USER-SPECIFIED RUNOFF COEFFICIENT = .8500
  S.C.S. CURVE NUMBER (AMC II) =   0
  AREA-AVERAGE RUNOFF COEFFICIENT = 0.8500
  SUBAREA AREA(ACRES) =     5.70   SUBAREA RUNOFF(CFS) =   26.42
  TOTAL AREA(ACRES) =       5.80   TOTAL RUNOFF(CFS) =   26.88
  TC(MIN.) =   6.70
============================================================================
  END OF STUDY SUMMARY:
  TOTAL AREA(ACRES)      =       5.80  TC(MIN.) =       6.70
  PEAK FLOW RATE(CFS)    =      26.88
============================================================================
============================================================================
  END OF RATIONAL METHOD ANALYSIS
```

```
****************************************************************************

            RATIONAL METHOD HYDROLOGY COMPUTER PROGRAM PACKAGE
            Reference: SAN DIEGO COUNTY FLOOD CONTROL DISTRICT
                         2003,1985,1981 HYDROLOGY MANUAL
         (c) Copyright 1982-2003 Advanced Engineering Software (aes)
             Ver. 1.5A Release Date: 01/01/2003  License ID 1261

                          Analysis prepared by:

                        RICK ENGINEERING COMPANY
                            5620 Friars Road
                        San Diego, California 92110
                      619-291-0707   Fax 619-291-4165

 ************************* DESCRIPTION OF STUDY *************************
* UNIVERSITY PARK AND RESEARCH CENTER (UPRC); J-16693-A                  *
* BASIN 600; 100-YEAR, 6-HOUR                                            *
* POST-PROJECT (PHASE III)                                               *
 ************************************************************************

  FILE NAME: UP6HP00.RAT
  TIME/DATE OF STUDY: 10:32 12/26/2013
----------------------------------------------------------------------------
  USER SPECIFIED HYDROLOGY AND HYDRAULIC MODEL INFORMATION:
----------------------------------------------------------------------------
  2003 SAN DIEGO MANUAL CRITERIA

  USER SPECIFIED STORM EVENT(YEAR) = 100.00
  6-HOUR DURATION PRECIPITATION (INCHES) =   2.500
  SPECIFIED MINIMUM PIPE SIZE(INCH) =  18.00
  SPECIFIED PERCENT OF GRADIENTS(DECIMAL) TO USE FOR FRICTION SLOPE = 0.90
  SAN DIEGO HYDROLOGY MANUAL "C"-VALUES USED FOR RATIONAL METHOD
  NOTE: USE MODIFIED RATIONAL METHOD PROCEDURES FOR CONFLUENCE ANALYSIS
  *USER-DEFINED STREET-SECTIONS FOR COUPLED PIPEFLOW AND STREETFLOW MODEL*
     HALF-  CROWN TO   STREET-CROSSFALL:   CURB  GUTTER-GEOMETRIES:  MANNING
     WIDTH  CROSSFALL  IN-  / OUT-/PARK-  HEIGHT  WIDTH  LIP   HIKE  FACTOR
NO.   (FT)     (FT)    SIDE / SIDE/ WAY    (FT)    (FT)  (FT)  (FT)    (n)
===  =====  =========  =================  ======  ===== ====== ===== =======
  1   30.0     20.0    0.018/0.018/0.020   0.67    2.00 0.0313 0.167 0.0150

  GLOBAL STREET FLOW-DEPTH CONSTRAINTS:
    1. Relative Flow-Depth =  0.00 FEET
       as (Maximum Allowable Street Flow Depth) - (Top-of-Curb)
    2. (Depth)*(Velocity) Constraint =  6.0 (FT*FT/S)
  *SIZE PIPE WITH A FLOW CAPACITY GREATER THAN
   OR EQUAL TO THE UPSTREAM TRIBUTARY PIPE.*

****************************************************************************
  FLOW PROCESS FROM NODE    600.00 TO NODE    602.00 IS CODE =  21
----------------------------------------------------------------------------
  >>>>>RATIONAL METHOD INITIAL SUBAREA ANALYSIS<<<<<
============================================================================
  *USER SPECIFIED(SUBAREA):
  USER-SPECIFIED RUNOFF COEFFICIENT = .8500
  S.C.S. CURVE NUMBER (AMC II) =   0
  INITIAL SUBAREA FLOW-LENGTH(FEET) =    60.00
  UPSTREAM ELEVATION(FEET) =    482.00
  DOWNSTREAM ELEVATION(FEET) =    481.10
  ELEVATION DIFFERENCE(FEET) =      0.90
```

```
  SUBAREA OVERLAND TIME OF FLOW(MIN.) =     3.045
   100 YEAR RAINFALL INTENSITY(INCH/HOUR) =  6.587
  NOTE: RAINFALL INTENSITY IS BASED ON Tc = 5-MINUTE.
  SUBAREA RUNOFF(CFS) =       0.56
  TOTAL AREA(ACRES) =       0.10   TOTAL RUNOFF(CFS) =       0.56

****************************************************************************
  FLOW PROCESS FROM NODE    602.00 TO NODE    690.00 IS CODE =  31
----------------------------------------------------------------------------
  >>>>>COMPUTE PIPE-FLOW TRAVEL TIME THRU SUBAREA<<<<<
  >>>>>USING COMPUTER-ESTIMATED PIPESIZE (NON-PRESSURE FLOW)<<<<<
============================================================================
  ELEVATION DATA: UPSTREAM(FEET) =   475.10  DOWNSTREAM(FEET) =   463.60
  FLOW LENGTH(FEET) =  1087.00   MANNING'S N =  0.013
  ESTIMATED PIPE DIAMETER(INCH) INCREASED TO 18.000
  DEPTH OF FLOW IN  18.0 INCH PIPE IS   2.8 INCHES
  PIPE-FLOW VELOCITY(FEET/SEC.) =   3.12
  ESTIMATED PIPE DIAMETER(INCH) =  18.00    NUMBER OF PIPES =   1
  PIPE-FLOW(CFS) =       0.56
  PIPE TRAVEL TIME(MIN.) =   5.81    Tc(MIN.) =   8.86
  LONGEST FLOWPATH FROM NODE    600.00 TO NODE    690.00 =  1147.00 FEET.

****************************************************************************
  FLOW PROCESS FROM NODE    602.00 TO NODE    690.00 IS CODE =  81
----------------------------------------------------------------------------
  >>>>>ADDITION OF SUBAREA TO MAINLINE PEAK FLOW<<<<<
============================================================================
   100 YEAR RAINFALL INTENSITY(INCH/HOUR) =  4.556
  *USER SPECIFIED(SUBAREA):
  USER-SPECIFIED RUNOFF COEFFICIENT = .8500
  S.C.S. CURVE NUMBER (AMC II) =   0
  AREA-AVERAGE RUNOFF COEFFICIENT = 0.8500
  SUBAREA AREA(ACRES) =     7.70   SUBAREA RUNOFF(CFS) =   29.82
  TOTAL AREA(ACRES) =       7.80   TOTAL RUNOFF(CFS) =   30.20
  TC(MIN.) =   8.86
============================================================================
  END OF STUDY SUMMARY:
  TOTAL AREA(ACRES)      =       7.80  TC(MIN.) =       8.86
  PEAK FLOW RATE(CFS)    =      30.20
============================================================================
============================================================================
  END OF RATIONAL METHOD ANALYSIS
```

```
****************************************************************************

            RATIONAL METHOD HYDROLOGY COMPUTER PROGRAM PACKAGE
            Reference: SAN DIEGO COUNTY FLOOD CONTROL DISTRICT
                         2003,1985,1981 HYDROLOGY MANUAL
         (c) Copyright 1982-2003 Advanced Engineering Software (aes)
             Ver. 1.5A Release Date: 01/01/2003  License ID 1261

                          Analysis prepared by:

                        RICK ENGINEERING COMPANY
                            5620 Friars Road
                       San Diego, California 92110
                     619-291-0707   Fax 619-291-4165

 ************************** DESCRIPTION OF STUDY **************************
* UNIVERSITY PARK AND RESEARCH CENTER (UPRC); J-16693-A                    *
* BASIN 700; 100-YEAR, 6-HOUR                                              *
* POST-PROJECT (PHASE III)                                                 *
 ****************************************************************************

  FILE NAME: UP7HP00.RAT
  TIME/DATE OF STUDY: 10:35 12/26/2013
----------------------------------------------------------------------------
  USER SPECIFIED HYDROLOGY AND HYDRAULIC MODEL INFORMATION:
----------------------------------------------------------------------------
  2003 SAN DIEGO MANUAL CRITERIA

  USER SPECIFIED STORM EVENT(YEAR) = 100.00
  6-HOUR DURATION PRECIPITATION (INCHES) =   2.500
  SPECIFIED MINIMUM PIPE SIZE(INCH) =  18.00
  SPECIFIED PERCENT OF GRADIENTS(DECIMAL) TO USE FOR FRICTION SLOPE = 0.90
  SAN DIEGO HYDROLOGY MANUAL "C"-VALUES USED FOR RATIONAL METHOD
  NOTE: USE MODIFIED RATIONAL METHOD PROCEDURES FOR CONFLUENCE ANALYSIS
  *USER-DEFINED STREET-SECTIONS FOR COUPLED PIPEFLOW AND STREETFLOW MODEL*
     HALF-  CROWN TO   STREET-CROSSFALL:   CURB  GUTTER-GEOMETRIES:  MANNING
     WIDTH  CROSSFALL  IN-  / OUT-/PARK-  HEIGHT  WIDTH  LIP   HIKE  FACTOR
NO.   (FT)     (FT)    SIDE / SIDE/ WAY    (FT)    (FT)  (FT)  (FT)    (n)
===  =====  =========  =================  ======  ===== ====== ===== =======
  1   30.0     20.0    0.018/0.018/0.020   0.67    2.00 0.0313 0.167 0.0150

  GLOBAL STREET FLOW-DEPTH CONSTRAINTS:
    1. Relative Flow-Depth =  0.00 FEET
       as (Maximum Allowable Street Flow Depth) - (Top-of-Curb)
    2. (Depth)*(Velocity) Constraint =  6.0 (FT*FT/S)
  *SIZE PIPE WITH A FLOW CAPACITY GREATER THAN
   OR EQUAL TO THE UPSTREAM TRIBUTARY PIPE.*

****************************************************************************
  FLOW PROCESS FROM NODE    701.00 TO NODE    702.00 IS CODE =  21
----------------------------------------------------------------------------
  >>>>>RATIONAL METHOD INITIAL SUBAREA ANALYSIS<<<<<
============================================================================
  *USER SPECIFIED(SUBAREA):
  USER-SPECIFIED RUNOFF COEFFICIENT = .8500
  S.C.S. CURVE NUMBER (AMC II) =   0
  INITIAL SUBAREA FLOW-LENGTH(FEET) =   100.00
  UPSTREAM ELEVATION(FEET) =    534.00
  DOWNSTREAM ELEVATION(FEET) =    510.00
  ELEVATION DIFFERENCE(FEET) =     24.00
```

```
  SUBAREA OVERLAND TIME OF FLOW(MIN.) =     2.089
  WARNING: THE MAXIMUM OVERLAND FLOW SLOPE, 10.%, IS USED IN Tc CALCULATION!
   100 YEAR RAINFALL INTENSITY(INCH/HOUR) =  6.587
  NOTE: RAINFALL INTENSITY IS BASED ON Tc = 5-MINUTE.
  SUBAREA RUNOFF(CFS) =       1.68
  TOTAL AREA(ACRES) =       0.30   TOTAL RUNOFF(CFS) =       1.68

****************************************************************************
  FLOW PROCESS FROM NODE    702.00 TO NODE    703.00 IS CODE =  31
----------------------------------------------------------------------------
  >>>>>COMPUTE PIPE-FLOW TRAVEL TIME THRU SUBAREA<<<<<
  >>>>>USING COMPUTER-ESTIMATED PIPESIZE (NON-PRESSURE FLOW)<<<<<
============================================================================
  ELEVATION DATA: UPSTREAM(FEET) =   504.00  DOWNSTREAM(FEET) =   501.80
  FLOW LENGTH(FEET) =   220.60   MANNING'S N =  0.013
  ESTIMATED PIPE DIAMETER(INCH) INCREASED TO 18.000
  DEPTH OF FLOW IN  18.0 INCH PIPE IS   5.0 INCHES
  PIPE-FLOW VELOCITY(FEET/SEC.) =   4.19
  ESTIMATED PIPE DIAMETER(INCH) =  18.00    NUMBER OF PIPES =   1
  PIPE-FLOW(CFS) =       1.68
  PIPE TRAVEL TIME(MIN.) =   0.88    Tc(MIN.) =   2.97
  LONGEST FLOWPATH FROM NODE    701.00 TO NODE    703.00 =   320.60 FEET.

****************************************************************************
  FLOW PROCESS FROM NODE    703.00 TO NODE    754.00 IS CODE =  31
----------------------------------------------------------------------------
  >>>>>COMPUTE PIPE-FLOW TRAVEL TIME THRU SUBAREA<<<<<
  >>>>>USING COMPUTER-ESTIMATED PIPESIZE (NON-PRESSURE FLOW)<<<<<
============================================================================
  ELEVATION DATA: UPSTREAM(FEET) =   501.80  DOWNSTREAM(FEET) =   469.80
  FLOW LENGTH(FEET) =  2469.00   MANNING'S N =  0.013
  ESTIMATED PIPE DIAMETER(INCH) INCREASED TO 18.000
  DEPTH OF FLOW IN  18.0 INCH PIPE IS   4.7 INCHES
  PIPE-FLOW VELOCITY(FEET/SEC.) =   4.60
  ESTIMATED PIPE DIAMETER(INCH) =  18.00    NUMBER OF PIPES =   1
  PIPE-FLOW(CFS) =       1.68
  PIPE TRAVEL TIME(MIN.) =   8.95    Tc(MIN.) =  11.91
  LONGEST FLOWPATH FROM NODE    701.00 TO NODE    754.00 =  2789.60 FEET.

****************************************************************************
  FLOW PROCESS FROM NODE    703.00 TO NODE    754.00 IS CODE =  81
----------------------------------------------------------------------------
  >>>>>ADDITION OF SUBAREA TO MAINLINE PEAK FLOW<<<<<
============================================================================
   100 YEAR RAINFALL INTENSITY(INCH/HOUR) =  3.763
  *USER SPECIFIED(SUBAREA):
  USER-SPECIFIED RUNOFF COEFFICIENT = .8500
  S.C.S. CURVE NUMBER (AMC II) =   0
  AREA-AVERAGE RUNOFF COEFFICIENT = 0.8500
  SUBAREA AREA(ACRES) =   31.20   SUBAREA RUNOFF(CFS) =   99.78
  TOTAL AREA(ACRES) =     31.50   TOTAL RUNOFF(CFS) =  100.74
  TC(MIN.) =  11.91
============================================================================
  END OF STUDY SUMMARY:
  TOTAL AREA(ACRES)      =     31.50  TC(MIN.) =     11.91
  PEAK FLOW RATE(CFS)    =    100.74
============================================================================
============================================================================
  END OF RATIONAL METHOD ANALYSIS
```

```
****************************************************************************

          RATIONAL METHOD HYDROLOGY COMPUTER PROGRAM PACKAGE
          Reference: SAN DIEGO COUNTY FLOOD CONTROL DISTRICT
                       2003,1985,1981 HYDROLOGY MANUAL
        (c) Copyright 1982-2003 Advanced Engineering Software (aes)
            Ver. 1.5A Release Date: 01/01/2003  License ID 1261

                          Analysis prepared by:

                        RICK ENGINEERING COMPANY
                            5620 Friars Road
                        San Diego, California 92110
                     619-291-0707   Fax 619-291-4165

 ************************* DESCRIPTION OF STUDY *************************
* UNIVERSITY PARK AND RESEARCH CENTER (UPRC); J-16693-A                  *
* BASINS 300, 400, 500, 600 AND 700; 100-YR, 6-HOUR                      *
* POST-PROJECT (PHASE III - COMBINED MAJOR DRAINAGE BASINS 300 THRU 700) *
 ************************************************************************

  FILE NAME: UPPH3P00.RAT
  TIME/DATE OF STUDY: 16:31 02/20/2014
----------------------------------------------------------------------------
  USER SPECIFIED HYDROLOGY AND HYDRAULIC MODEL INFORMATION:
----------------------------------------------------------------------------
  2003 SAN DIEGO MANUAL CRITERIA

  USER SPECIFIED STORM EVENT(YEAR) = 100.00
  6-HOUR DURATION PRECIPITATION (INCHES) =   2.500
  SPECIFIED MINIMUM PIPE SIZE(INCH) =  18.00
  SPECIFIED PERCENT OF GRADIENTS(DECIMAL) TO USE FOR FRICTION SLOPE = 0.90
  SAN DIEGO HYDROLOGY MANUAL "C"-VALUES USED FOR RATIONAL METHOD
  NOTE: USE MODIFIED RATIONAL METHOD PROCEDURES FOR CONFLUENCE ANALYSIS
  *USER-DEFINED STREET-SECTIONS FOR COUPLED PIPEFLOW AND STREETFLOW MODEL*
     HALF-  CROWN TO   STREET-CROSSFALL:   CURB  GUTTER-GEOMETRIES:  MANNING
     WIDTH  CROSSFALL  IN-  / OUT-/PARK-  HEIGHT  WIDTH  LIP   HIKE  FACTOR
NO.   (FT)     (FT)    SIDE / SIDE/ WAY    (FT)    (FT)  (FT)  (FT)    (n)
===  =====  =========  =================  ======  ===== ====== ===== =======
  1   30.0     20.0    0.018/0.018/0.020   0.67    2.00 0.0313 0.167 0.0150

  GLOBAL STREET FLOW-DEPTH CONSTRAINTS:
    1. Relative Flow-Depth =  0.00 FEET
       as (Maximum Allowable Street Flow Depth) - (Top-of-Curb)
    2. (Depth)*(Velocity) Constraint =  6.0 (FT*FT/S)
  *SIZE PIPE WITH A FLOW CAPACITY GREATER THAN
   OR EQUAL TO THE UPSTREAM TRIBUTARY PIPE.*

+--------------------------------------------------------------------------+
| RUNOFF FROM BASIN 300                                                    |
|                                                                          |
|                                                                          |
+--------------------------------------------------------------------------+

****************************************************************************
  FLOW PROCESS FROM NODE    315.00 TO NODE    315.00 IS CODE =   7
----------------------------------------------------------------------------
  >>>>>USER SPECIFIED HYDROLOGY INFORMATION AT NODE<<<<<
============================================================================
  USER-SPECIFIED VALUES ARE AS FOLLOWS:
```

```
  TC(MIN) =  11.90   RAIN INTENSITY(INCH/HOUR) =  3.77
  TOTAL AREA(ACRES) =     80.90   TOTAL RUNOFF(CFS) =     233.50

****************************************************************************
  FLOW PROCESS FROM NODE    315.00 TO NODE    315.00 IS CODE =   1
----------------------------------------------------------------------------
  >>>>>DESIGNATE INDEPENDENT STREAM FOR CONFLUENCE<<<<<
============================================================================
  TOTAL NUMBER OF STREAMS =  5
  CONFLUENCE VALUES USED FOR INDEPENDENT STREAM  1 ARE:
  TIME OF CONCENTRATION(MIN.) =  11.90
  RAINFALL INTENSITY(INCH/HR) =   3.77
  TOTAL STREAM AREA(ACRES) =    80.90
  PEAK FLOW RATE(CFS) AT CONFLUENCE =    233.50

+--------------------------------------------------------------------------+
| RUNOFF FROM BASIN 700                                                    |
|                                                                          |
|                                                                          |
+--------------------------------------------------------------------------+

****************************************************************************
  FLOW PROCESS FROM NODE    701.00 TO NODE    315.00 IS CODE =   7
----------------------------------------------------------------------------
  >>>>>USER SPECIFIED HYDROLOGY INFORMATION AT NODE<<<<<
============================================================================
  USER-SPECIFIED VALUES ARE AS FOLLOWS:
  TC(MIN) =  11.90   RAIN INTENSITY(INCH/HOUR) =  3.77
  TOTAL AREA(ACRES) =     31.50   TOTAL RUNOFF(CFS) =     100.70

****************************************************************************
  FLOW PROCESS FROM NODE    315.00 TO NODE    315.00 IS CODE =   1
----------------------------------------------------------------------------
  >>>>>DESIGNATE INDEPENDENT STREAM FOR CONFLUENCE<<<<<
============================================================================
  TOTAL NUMBER OF STREAMS =  5
  CONFLUENCE VALUES USED FOR INDEPENDENT STREAM  2 ARE:
  TIME OF CONCENTRATION(MIN.) =  11.90
  RAINFALL INTENSITY(INCH/HR) =   3.77
  TOTAL STREAM AREA(ACRES) =    31.50
  PEAK FLOW RATE(CFS) AT CONFLUENCE =    100.70

+--------------------------------------------------------------------------+
| RUNOFF FROM BASIN 400                                                    |
|                                                                          |
|                                                                          |
+--------------------------------------------------------------------------+

****************************************************************************
  FLOW PROCESS FROM NODE    400.00 TO NODE    315.00 IS CODE =   7
----------------------------------------------------------------------------
  >>>>>USER SPECIFIED HYDROLOGY INFORMATION AT NODE<<<<<
============================================================================
  USER-SPECIFIED VALUES ARE AS FOLLOWS:
  TC(MIN) =  14.10   RAIN INTENSITY(INCH/HOUR) =  3.37
  TOTAL AREA(ACRES) =     27.60   TOTAL RUNOFF(CFS) =      79.30

****************************************************************************
  FLOW PROCESS FROM NODE    315.00 TO NODE    315.00 IS CODE =   1
----------------------------------------------------------------------------
  >>>>>DESIGNATE INDEPENDENT STREAM FOR CONFLUENCE<<<<<
```

```
==============================================================================
  TOTAL NUMBER OF STREAMS =  5
  CONFLUENCE VALUES USED FOR INDEPENDENT STREAM  3 ARE:
  TIME OF CONCENTRATION(MIN.) =  14.10
  RAINFALL INTENSITY(INCH/HR) =   3.37
  TOTAL STREAM AREA(ACRES) =    27.60
  PEAK FLOW RATE(CFS) AT CONFLUENCE =     79.30

+----------------------------------------------------------------------------+
| RUNOFF FROM BASIN 600                                                      |
|                                                                            |
|                                                                            |
+----------------------------------------------------------------------------+

****************************************************************************
  FLOW PROCESS FROM NODE    600.00 TO NODE    315.00 IS CODE =   7
----------------------------------------------------------------------------
  >>>>>USER SPECIFIED HYDROLOGY INFORMATION AT NODE<<<<<
==============================================================================
  USER-SPECIFIED VALUES ARE AS FOLLOWS:
  TC(MIN) =   8.90   RAIN INTENSITY(INCH/HOUR) =  4.54
  TOTAL AREA(ACRES) =     7.80   TOTAL RUNOFF(CFS) =     30.20

****************************************************************************
  FLOW PROCESS FROM NODE    315.00 TO NODE    315.00 IS CODE =   1
----------------------------------------------------------------------------
  >>>>>DESIGNATE INDEPENDENT STREAM FOR CONFLUENCE<<<<<
==============================================================================
  TOTAL NUMBER OF STREAMS =  5
  CONFLUENCE VALUES USED FOR INDEPENDENT STREAM  4 ARE:
  TIME OF CONCENTRATION(MIN.) =   8.90
  RAINFALL INTENSITY(INCH/HR) =   4.54
  TOTAL STREAM AREA(ACRES) =     7.80
  PEAK FLOW RATE(CFS) AT CONFLUENCE =     30.20

+----------------------------------------------------------------------------+
| RUNOFF FROM BASIN 500                                                      |
|                                                                            |
|                                                                            |
+----------------------------------------------------------------------------+

****************************************************************************
  FLOW PROCESS FROM NODE    500.00 TO NODE    315.00 IS CODE =   7
----------------------------------------------------------------------------
  >>>>>USER SPECIFIED HYDROLOGY INFORMATION AT NODE<<<<<
==============================================================================
  USER-SPECIFIED VALUES ARE AS FOLLOWS:
  TC(MIN) =   6.70   RAIN INTENSITY(INCH/HOUR) =  5.45
  TOTAL AREA(ACRES) =     5.80   TOTAL RUNOFF(CFS) =     26.90

****************************************************************************
  FLOW PROCESS FROM NODE    315.00 TO NODE    315.00 IS CODE =   1
----------------------------------------------------------------------------
  >>>>>DESIGNATE INDEPENDENT STREAM FOR CONFLUENCE<<<<<
  >>>>>AND COMPUTE VARIOUS CONFLUENCED STREAM VALUES<<<<<
==============================================================================
  TOTAL NUMBER OF STREAMS =  5
  CONFLUENCE VALUES USED FOR INDEPENDENT STREAM  5 ARE:
  TIME OF CONCENTRATION(MIN.) =   6.70
  RAINFALL INTENSITY(INCH/HR) =   5.45
  TOTAL STREAM AREA(ACRES) =     5.80
```

PEAK FLOW RATE(CFS) AT CONFLUENCE = 26.90

** CONFLUENCE DATA **

STREAM NUMBER	RUNOFF (CFS)	Tc (MIN.)	INTENSITY (INCH/HOUR)	AREA (ACRE)
1	233.50	11.90	3.765	80.90
2	100.70	11.90	3.765	31.50
3	79.30	14.10	3.375	27.60
4	30.20	8.90	4.541	7.80
5	26.90	6.70	5.454	5.80

RAINFALL INTENSITY AND TIME OF CONCENTRATION RATIO
CONFLUENCE FORMULA USED FOR 5 STREAMS.

** PEAK FLOW RATE TABLE **

STREAM NUMBER	RUNOFF (CFS)	Tc (MIN.)	INTENSITY (INCH/HOUR)
1	275.48	6.70	5.454
2	352.60	8.90	4.541
3	444.74	11.90	3.765
4	444.74	11.90	3.765
5	417.95	14.10	3.375

COMPUTED CONFLUENCE ESTIMATES ARE AS FOLLOWS:
PEAK FLOW RATE(CFS) = 444.74 Tc(MIN.) = 11.90
TOTAL AREA(ACRES) = 153.60
LONGEST FLOWPATH FROM NODE 301.00 TO NODE 315.00 = 0.00 FEET.

==========

END OF STUDY SUMMARY:
TOTAL AREA(ACRES) = 153.60 TC(MIN.) = 11.90
PEAK FLOW RATE(CFS) = 444.74

==========
==========

END OF RATIONAL METHOD ANALYSIS

```
****************************************************************************

            RATIONAL METHOD HYDROLOGY COMPUTER PROGRAM PACKAGE
            Reference: SAN DIEGO COUNTY FLOOD CONTROL DISTRICT
                         2003,1985,1981 HYDROLOGY MANUAL
         (c) Copyright 1982-2003 Advanced Engineering Software (aes)
             Ver. 1.5A Release Date: 01/01/2003  License ID 1261

                          Analysis prepared by:

                        RICK ENGINEERING COMPANY
                            5620 Friars Road
                        San Diego, California 92110
                      619-291-0707   Fax 619-291-4165

 ************************** DESCRIPTION OF STUDY **************************
* UNIVERSITY PARK AND RESEARCH CENTER (UPRC); J-16693-A                    *
* BASIN 1000; 100-YEAR, 6-HOUR                                             *
* POST-PROJECT (PHASE IV)                                                  *
 ***************************************************************************

  FILE NAME: UP10HP00.RAT
  TIME/DATE OF STUDY: 13:26 02/09/2014
---------------------------------------------------------------------------
  USER SPECIFIED HYDROLOGY AND HYDRAULIC MODEL INFORMATION:
---------------------------------------------------------------------------
  2003 SAN DIEGO MANUAL CRITERIA

  USER SPECIFIED STORM EVENT(YEAR) = 100.00
  6-HOUR DURATION PRECIPITATION (INCHES) =   2.500
  SPECIFIED MINIMUM PIPE SIZE(INCH) =  18.00
  SPECIFIED PERCENT OF GRADIENTS(DECIMAL) TO USE FOR FRICTION SLOPE = 0.90
  SAN DIEGO HYDROLOGY MANUAL "C"-VALUES USED FOR RATIONAL METHOD
  NOTE: USE MODIFIED RATIONAL METHOD PROCEDURES FOR CONFLUENCE ANALYSIS
  *USER-DEFINED STREET-SECTIONS FOR COUPLED PIPEFLOW AND STREETFLOW MODEL*
     HALF-  CROWN TO   STREET-CROSSFALL:   CURB  GUTTER-GEOMETRIES:  MANNING
     WIDTH  CROSSFALL  IN-  / OUT-/PARK-  HEIGHT  WIDTH  LIP   HIKE  FACTOR
NO.   (FT)     (FT)    SIDE / SIDE/ WAY    (FT)    (FT)  (FT)  (FT)    (n)
===  =====  =========  =================  ======  ===== ====== ===== =======
  1   30.0     20.0    0.018/0.018/0.020   0.67    2.00 0.0313 0.167 0.0150

  GLOBAL STREET FLOW-DEPTH CONSTRAINTS:
    1. Relative Flow-Depth =  0.00 FEET
       as (Maximum Allowable Street Flow Depth) - (Top-of-Curb)
    2. (Depth)*(Velocity) Constraint =  6.0 (FT*FT/S)
  *SIZE PIPE WITH A FLOW CAPACITY GREATER THAN
   OR EQUAL TO THE UPSTREAM TRIBUTARY PIPE.*

****************************************************************************
  FLOW PROCESS FROM NODE   1001.00 TO NODE   1005.00 IS CODE =  21
---------------------------------------------------------------------------
  >>>>>RATIONAL METHOD INITIAL SUBAREA ANALYSIS<<<<<
===========================================================================
  *USER SPECIFIED(SUBAREA):
  USER-SPECIFIED RUNOFF COEFFICIENT = .8500
  S.C.S. CURVE NUMBER (AMC II) =   0
  INITIAL SUBAREA FLOW-LENGTH(FEET) =    50.00
  UPSTREAM ELEVATION(FEET) =    510.00
  DOWNSTREAM ELEVATION(FEET) =    509.50
  ELEVATION DIFFERENCE(FEET) =      0.50
```

```
  SUBAREA OVERLAND TIME OF FLOW(MIN.) =     3.182
   100 YEAR RAINFALL INTENSITY(INCH/HOUR) =  6.587
  NOTE: RAINFALL INTENSITY IS BASED ON Tc = 5-MINUTE.
  SUBAREA RUNOFF(CFS) =       2.24
  TOTAL AREA(ACRES) =       0.40   TOTAL RUNOFF(CFS) =       2.24

****************************************************************************
  FLOW PROCESS FROM NODE   1005.00 TO NODE   1010.00 IS CODE =  31
----------------------------------------------------------------------------
  >>>>>COMPUTE PIPE-FLOW TRAVEL TIME THRU SUBAREA<<<<<
  >>>>>USING COMPUTER-ESTIMATED PIPESIZE (NON-PRESSURE FLOW)<<<<<
============================================================================
  ELEVATION DATA: UPSTREAM(FEET) =   509.50  DOWNSTREAM(FEET) =   508.50
  FLOW LENGTH(FEET) =   400.00   MANNING'S N =  0.019
  DEPTH OF FLOW IN  18.0 INCH PIPE IS  10.7 INCHES
  PIPE-FLOW VELOCITY(FEET/SEC.) =   2.06
  ESTIMATED PIPE DIAMETER(INCH) =  18.00    NUMBER OF PIPES =   1
  PIPE-FLOW(CFS) =       2.24
  PIPE TRAVEL TIME(MIN.) =   3.24    Tc(MIN.) =   6.42
  LONGEST FLOWPATH FROM NODE   1001.00 TO NODE   1010.00 =   450.00 FEET.

****************************************************************************
  FLOW PROCESS FROM NODE   1010.00 TO NODE   1010.00 IS CODE =  81
----------------------------------------------------------------------------
  >>>>>ADDITION OF SUBAREA TO MAINLINE PEAK FLOW<<<<<
============================================================================
   100 YEAR RAINFALL INTENSITY(INCH/HOUR) =  5.603
  *USER SPECIFIED(SUBAREA):
  USER-SPECIFIED RUNOFF COEFFICIENT = .3500
  S.C.S. CURVE NUMBER (AMC II) =   0
  AREA-AVERAGE RUNOFF COEFFICIENT = 0.4676
  SUBAREA AREA(ACRES) =     1.30   SUBAREA RUNOFF(CFS) =     2.55
  TOTAL AREA(ACRES) =       1.70   TOTAL RUNOFF(CFS) =    4.45
  TC(MIN.) =   6.42

****************************************************************************
  FLOW PROCESS FROM NODE   1010.00 TO NODE   1020.00 IS CODE =  31
----------------------------------------------------------------------------
  >>>>>COMPUTE PIPE-FLOW TRAVEL TIME THRU SUBAREA<<<<<
  >>>>>USING COMPUTER-ESTIMATED PIPESIZE (NON-PRESSURE FLOW)<<<<<
============================================================================
  ELEVATION DATA: UPSTREAM(FEET) =   508.50  DOWNSTREAM(FEET) =   507.00
  FLOW LENGTH(FEET) =    58.00   MANNING'S N =  0.013
  ESTIMATED PIPE DIAMETER(INCH) INCREASED TO 18.000
  DEPTH OF FLOW IN  18.0 INCH PIPE IS   6.5 INCHES
  PIPE-FLOW VELOCITY(FEET/SEC.) =   7.76
  ESTIMATED PIPE DIAMETER(INCH) =  18.00    NUMBER OF PIPES =   1
  PIPE-FLOW(CFS) =       4.45
  PIPE TRAVEL TIME(MIN.) =   0.12    Tc(MIN.) =   6.55
  LONGEST FLOWPATH FROM NODE   1001.00 TO NODE   1020.00 =   508.00 FEET.
============================================================================
  END OF STUDY SUMMARY:
  TOTAL AREA(ACRES)      =       1.70  TC(MIN.) =       6.55
  PEAK FLOW RATE(CFS)    =       4.45
============================================================================
============================================================================
  END OF RATIONAL METHOD ANALYSIS
```

```
****************************************************************************

            RATIONAL METHOD HYDROLOGY COMPUTER PROGRAM PACKAGE
            Reference: SAN DIEGO COUNTY FLOOD CONTROL DISTRICT
                         2003,1985,1981 HYDROLOGY MANUAL
         (c) Copyright 1982-2003 Advanced Engineering Software (aes)
             Ver. 1.5A Release Date: 01/01/2003  License ID 1261

                          Analysis prepared by:

                        RICK ENGINEERING COMPANY
                            5620 Friars Road
                       San Diego, California 92110
                     619-291-0707   Fax 619-291-4165

 ************************** DESCRIPTION OF STUDY **************************
* UNIVERSITY PARK AND RESEARCH CENTER (UPRC); J-16693-A                    *
* BASIN 1100; 100-YEAR, 6-HOUR                                             *
* POST-PROJECT (PHASE IV)                                                  *
 ***************************************************************************

  FILE NAME: UP11HP00.RAT
  TIME/DATE OF STUDY: 14:07 02/09/2014
---------------------------------------------------------------------------
  USER SPECIFIED HYDROLOGY AND HYDRAULIC MODEL INFORMATION:
---------------------------------------------------------------------------
  2003 SAN DIEGO MANUAL CRITERIA

  USER SPECIFIED STORM EVENT(YEAR) = 100.00
  6-HOUR DURATION PRECIPITATION (INCHES) =   2.500
  SPECIFIED MINIMUM PIPE SIZE(INCH) =  18.00
  SPECIFIED PERCENT OF GRADIENTS(DECIMAL) TO USE FOR FRICTION SLOPE = 0.90
  SAN DIEGO HYDROLOGY MANUAL "C"-VALUES USED FOR RATIONAL METHOD
  NOTE: USE MODIFIED RATIONAL METHOD PROCEDURES FOR CONFLUENCE ANALYSIS
  *USER-DEFINED STREET-SECTIONS FOR COUPLED PIPEFLOW AND STREETFLOW MODEL*
     HALF-  CROWN TO   STREET-CROSSFALL:   CURB  GUTTER-GEOMETRIES:  MANNING
     WIDTH  CROSSFALL  IN-  / OUT-/PARK-  HEIGHT  WIDTH  LIP   HIKE  FACTOR
NO.   (FT)     (FT)    SIDE / SIDE/ WAY    (FT)    (FT)  (FT)  (FT)    (n)
===  =====  =========  =================  ======  ===== ====== ===== =======
  1   30.0     20.0    0.018/0.018/0.020   0.67    2.00 0.0313 0.167 0.0150

  GLOBAL STREET FLOW-DEPTH CONSTRAINTS:
    1. Relative Flow-Depth =  0.00 FEET
       as (Maximum Allowable Street Flow Depth) - (Top-of-Curb)
    2. (Depth)*(Velocity) Constraint =  6.0 (FT*FT/S)
  *SIZE PIPE WITH A FLOW CAPACITY GREATER THAN
   OR EQUAL TO THE UPSTREAM TRIBUTARY PIPE.*

****************************************************************************
  FLOW PROCESS FROM NODE   1101.00 TO NODE   1105.00 IS CODE =  21
---------------------------------------------------------------------------
  >>>>>RATIONAL METHOD INITIAL SUBAREA ANALYSIS<<<<<
===========================================================================
  *USER SPECIFIED(SUBAREA):
  USER-SPECIFIED RUNOFF COEFFICIENT = .8500
  S.C.S. CURVE NUMBER (AMC II) =   0
  INITIAL SUBAREA FLOW-LENGTH(FEET) =    60.00
  UPSTREAM ELEVATION(FEET) =    570.00
  DOWNSTREAM ELEVATION(FEET) =    568.80
  ELEVATION DIFFERENCE(FEET) =      1.20
```

```
  SUBAREA OVERLAND TIME OF FLOW(MIN.) =     2.767
   100 YEAR RAINFALL INTENSITY(INCH/HOUR) =  6.587
  NOTE: RAINFALL INTENSITY IS BASED ON Tc = 5-MINUTE.
  SUBAREA RUNOFF(CFS) =       2.24
  TOTAL AREA(ACRES) =       0.40   TOTAL RUNOFF(CFS) =       2.24

****************************************************************************
  FLOW PROCESS FROM NODE   1105.00 TO NODE   1110.00 IS CODE =  31
----------------------------------------------------------------------------
  >>>>>COMPUTE PIPE-FLOW TRAVEL TIME THRU SUBAREA<<<<<
  >>>>>USING COMPUTER-ESTIMATED PIPESIZE (NON-PRESSURE FLOW)<<<<<
============================================================================
  ELEVATION DATA: UPSTREAM(FEET) =   566.00  DOWNSTREAM(FEET) =   557.00
  FLOW LENGTH(FEET) =   450.00   MANNING'S N =  0.013
  ESTIMATED PIPE DIAMETER(INCH) INCREASED TO 18.000
  DEPTH OF FLOW IN  18.0 INCH PIPE IS   4.9 INCHES
  PIPE-FLOW VELOCITY(FEET/SEC.) =   5.82
  ESTIMATED PIPE DIAMETER(INCH) =  18.00    NUMBER OF PIPES =   1
  PIPE-FLOW(CFS) =       2.24
  PIPE TRAVEL TIME(MIN.) =   1.29    Tc(MIN.) =   4.05
  LONGEST FLOWPATH FROM NODE   1101.00 TO NODE   1110.00 =   510.00 FEET.

****************************************************************************
  FLOW PROCESS FROM NODE   1110.00 TO NODE   1110.00 IS CODE =  81
----------------------------------------------------------------------------
  >>>>>ADDITION OF SUBAREA TO MAINLINE PEAK FLOW<<<<<
============================================================================
   100 YEAR RAINFALL INTENSITY(INCH/HOUR) =  6.587
  NOTE: RAINFALL INTENSITY IS BASED ON Tc = 5-MINUTE.
  *USER SPECIFIED(SUBAREA):
  USER-SPECIFIED RUNOFF COEFFICIENT = .8500
  S.C.S. CURVE NUMBER (AMC II) =   0
  AREA-AVERAGE RUNOFF COEFFICIENT = 0.8500
  SUBAREA AREA(ACRES) =     1.80   SUBAREA RUNOFF(CFS) =   10.08
  TOTAL AREA(ACRES) =       2.20   TOTAL RUNOFF(CFS) =   12.32
  TC(MIN.) =   4.05

****************************************************************************
  FLOW PROCESS FROM NODE   1110.00 TO NODE   1115.00 IS CODE =  31
----------------------------------------------------------------------------
  >>>>>COMPUTE PIPE-FLOW TRAVEL TIME THRU SUBAREA<<<<<
  >>>>>USING COMPUTER-ESTIMATED PIPESIZE (NON-PRESSURE FLOW)<<<<<
============================================================================
  ELEVATION DATA: UPSTREAM(FEET) =   557.00  DOWNSTREAM(FEET) =   513.00
  FLOW LENGTH(FEET) =   660.00   MANNING'S N =  0.013
  ESTIMATED PIPE DIAMETER(INCH) INCREASED TO 18.000
  DEPTH OF FLOW IN  18.0 INCH PIPE IS   8.8 INCHES
  PIPE-FLOW VELOCITY(FEET/SEC.) =  14.40
  ESTIMATED PIPE DIAMETER(INCH) =  18.00    NUMBER OF PIPES =   1
  PIPE-FLOW(CFS) =      12.32
  PIPE TRAVEL TIME(MIN.) =   0.76    Tc(MIN.) =   4.82
  LONGEST FLOWPATH FROM NODE   1101.00 TO NODE   1115.00 =  1170.00 FEET.

****************************************************************************
  FLOW PROCESS FROM NODE   1115.00 TO NODE   1115.00 IS CODE =  81
----------------------------------------------------------------------------
  >>>>>ADDITION OF SUBAREA TO MAINLINE PEAK FLOW<<<<<
============================================================================
   100 YEAR RAINFALL INTENSITY(INCH/HOUR) =  6.587
  NOTE: RAINFALL INTENSITY IS BASED ON Tc = 5-MINUTE.
  *USER SPECIFIED(SUBAREA):
```

```
  USER-SPECIFIED RUNOFF COEFFICIENT = .8500
  S.C.S. CURVE NUMBER (AMC II) =   0
  AREA-AVERAGE RUNOFF COEFFICIENT = 0.8500
  SUBAREA AREA(ACRES) =     0.50   SUBAREA RUNOFF(CFS) =     2.80
  TOTAL AREA(ACRES) =       2.70   TOTAL RUNOFF(CFS) =    15.12
  TC(MIN.) =   4.82

****************************************************************************
  FLOW PROCESS FROM NODE   1115.00 TO NODE   1115.00 IS CODE =  81
----------------------------------------------------------------------------
  >>>>>ADDITION OF SUBAREA TO MAINLINE PEAK FLOW<<<<<
============================================================================
   100 YEAR RAINFALL INTENSITY(INCH/HOUR) =  6.587
  NOTE: RAINFALL INTENSITY IS BASED ON Tc = 5-MINUTE.
  *USER SPECIFIED(SUBAREA):
  USER-SPECIFIED RUNOFF COEFFICIENT = .3500
  S.C.S. CURVE NUMBER (AMC II) =   0
  AREA-AVERAGE RUNOFF COEFFICIENT = 0.6435
  SUBAREA AREA(ACRES) =     1.90   SUBAREA RUNOFF(CFS) =     4.38
  TOTAL AREA(ACRES) =       4.60   TOTAL RUNOFF(CFS) =    19.50
  TC(MIN.) =   4.82

****************************************************************************
  FLOW PROCESS FROM NODE   1115.00 TO NODE   1130.00 IS CODE =  31
----------------------------------------------------------------------------
  >>>>>COMPUTE PIPE-FLOW TRAVEL TIME THRU SUBAREA<<<<<
  >>>>>USING COMPUTER-ESTIMATED PIPESIZE (NON-PRESSURE FLOW)<<<<<
============================================================================
  ELEVATION DATA: UPSTREAM(FEET) =   513.00  DOWNSTREAM(FEET) =   508.00
  FLOW LENGTH(FEET) =    33.00   MANNING'S N =  0.013
  ESTIMATED PIPE DIAMETER(INCH) INCREASED TO 18.000
  DEPTH OF FLOW IN  18.0 INCH PIPE IS   9.0 INCHES
  PIPE-FLOW VELOCITY(FEET/SEC.) =  21.98
  ESTIMATED PIPE DIAMETER(INCH) =  18.00    NUMBER OF PIPES =   1
  PIPE-FLOW(CFS) =     19.50
  PIPE TRAVEL TIME(MIN.) =   0.03    Tc(MIN.) =   4.84
  LONGEST FLOWPATH FROM NODE   1101.00 TO NODE   1130.00 =  1203.00 FEET.

****************************************************************************
  FLOW PROCESS FROM NODE   1130.00 TO NODE   1150.00 IS CODE =  51
----------------------------------------------------------------------------
  >>>>>COMPUTE TRAPEZOIDAL CHANNEL FLOW<<<<<
  >>>>>TRAVELTIME THRU SUBAREA (EXISTING ELEMENT)<<<<<
============================================================================
  ELEVATION DATA: UPSTREAM(FEET) =    508.00  DOWNSTREAM(FEET) =    504.00
  CHANNEL LENGTH THRU SUBAREA(FEET) =    90.00   CHANNEL SLOPE =  0.0444
  CHANNEL BASE(FEET) =    3.00   "Z" FACTOR =   4.000
  MANNING'S FACTOR = 0.035   MAXIMUM DEPTH(FEET) =  10.00
   100 YEAR RAINFALL INTENSITY(INCH/HOUR) =  6.479
  *USER SPECIFIED(SUBAREA):
  USER-SPECIFIED RUNOFF COEFFICIENT = .3500
  S.C.S. CURVE NUMBER (AMC II) =   0
  TRAVEL TIME COMPUTED USING ESTIMATED FLOW(CFS) =     20.18
  TRAVEL TIME THRU SUBAREA BASED ON VELOCITY(FEET/SEC.) =   5.25
  AVERAGE FLOW DEPTH(FEET) =   0.67   TRAVEL TIME(MIN.) =   0.29
  Tc(MIN.) =   5.13
  SUBAREA AREA(ACRES) =     0.60       SUBAREA RUNOFF(CFS) =    1.36
  AREA-AVERAGE RUNOFF COEFFICIENT =  0.610
  TOTAL AREA(ACRES) =       5.20         PEAK FLOW RATE(CFS) =      20.54

  END OF SUBAREA CHANNEL FLOW HYDRAULICS:
```

```
  DEPTH(FEET) =  0.68   FLOW VELOCITY(FEET/SEC.) =   5.26
  LONGEST FLOWPATH FROM NODE   1101.00 TO NODE   1150.00 =  1293.00 FEET.

****************************************************************************
  FLOW PROCESS FROM NODE   1150.00 TO NODE   1150.00 IS CODE =   1
----------------------------------------------------------------------------
  >>>>>DESIGNATE INDEPENDENT STREAM FOR CONFLUENCE<<<<<
============================================================================
  TOTAL NUMBER OF STREAMS =  2
  CONFLUENCE VALUES USED FOR INDEPENDENT STREAM  1 ARE:
  TIME OF CONCENTRATION(MIN.) =   5.13
  RAINFALL INTENSITY(INCH/HR) =   6.48
  TOTAL STREAM AREA(ACRES) =     5.20
  PEAK FLOW RATE(CFS) AT CONFLUENCE =     20.54

****************************************************************************
  FLOW PROCESS FROM NODE   1135.00 TO NODE   1140.00 IS CODE =  21
----------------------------------------------------------------------------
  >>>>>RATIONAL METHOD INITIAL SUBAREA ANALYSIS<<<<<
============================================================================
  *USER SPECIFIED(SUBAREA):
  USER-SPECIFIED RUNOFF COEFFICIENT = .3500
  S.C.S. CURVE NUMBER (AMC II) =  0
  INITIAL SUBAREA FLOW-LENGTH(FEET) =   100.00
  UPSTREAM ELEVATION(FEET) =    508.00
  DOWNSTREAM ELEVATION(FEET) =    506.00
  ELEVATION DIFFERENCE(FEET) =      2.00
  SUBAREA OVERLAND TIME OF FLOW(MIN.) =    8.965
  WARNING: INITIAL SUBAREA FLOW PATH LENGTH IS GREATER THAN
           THE MAXIMUM OVERLAND FLOW LENGTH =    70.00
           (Reference: Table 3-1B of Hydrology Manual)
           THE MAXIMUM OVERLAND FLOW LENGTH IS USED IN Tc CALCULATION!
   100 YEAR RAINFALL INTENSITY(INCH/HOUR) =  4.520
  SUBAREA RUNOFF(CFS) =      1.27
  TOTAL AREA(ACRES) =      0.80   TOTAL RUNOFF(CFS) =      1.27

****************************************************************************
  FLOW PROCESS FROM NODE   1140.00 TO NODE   1150.00 IS CODE =  51
----------------------------------------------------------------------------
  >>>>>COMPUTE TRAPEZOIDAL CHANNEL FLOW<<<<<
  >>>>>TRAVELTIME THRU SUBAREA (EXISTING ELEMENT)<<<<<
============================================================================
  ELEVATION DATA: UPSTREAM(FEET) =    506.00  DOWNSTREAM(FEET) =    504.00
  CHANNEL LENGTH THRU SUBAREA(FEET) =   210.00   CHANNEL SLOPE =  0.0095
  CHANNEL BASE(FEET) =    3.00   "Z" FACTOR =   4.000
  MANNING'S FACTOR = 0.035   MAXIMUM DEPTH(FEET) =  10.00
   100 YEAR RAINFALL INTENSITY(INCH/HOUR) =  3.943
  *USER SPECIFIED(SUBAREA):
  USER-SPECIFIED RUNOFF COEFFICIENT = .3500
  S.C.S. CURVE NUMBER (AMC II) =   0
  TRAVEL TIME COMPUTED USING ESTIMATED FLOW(CFS) =      2.44
  TRAVEL TIME THRU SUBAREA BASED ON VELOCITY(FEET/SEC.) =   1.66
  AVERAGE FLOW DEPTH(FEET) =   0.34   TRAVEL TIME(MIN.) =   2.11
  Tc(MIN.) =  11.08
  SUBAREA AREA(ACRES) =     1.70       SUBAREA RUNOFF(CFS) =    2.35
  AREA-AVERAGE RUNOFF COEFFICIENT =  0.350
  TOTAL AREA(ACRES) =      2.50         PEAK FLOW RATE(CFS) =       3.45

  END OF SUBAREA CHANNEL FLOW HYDRAULICS:
  DEPTH(FEET) =  0.41   FLOW VELOCITY(FEET/SEC.) =   1.83
  LONGEST FLOWPATH FROM NODE   1135.00 TO NODE   1150.00 =   310.00 FEET.
```

```
****************************************************************************
  FLOW PROCESS FROM NODE   1150.00 TO NODE   1150.00 IS CODE =   1
----------------------------------------------------------------------------
  >>>>>DESIGNATE INDEPENDENT STREAM FOR CONFLUENCE<<<<<
  >>>>>AND COMPUTE VARIOUS CONFLUENCED STREAM VALUES<<<<<
============================================================================
  TOTAL NUMBER OF STREAMS =  2
  CONFLUENCE VALUES USED FOR INDEPENDENT STREAM  2 ARE:
  TIME OF CONCENTRATION(MIN.) =  11.08
  RAINFALL INTENSITY(INCH/HR) =   3.94
  TOTAL STREAM AREA(ACRES) =     2.50
  PEAK FLOW RATE(CFS) AT CONFLUENCE =      3.45

  ** CONFLUENCE DATA **
  STREAM     RUNOFF      Tc      INTENSITY      AREA
  NUMBER      (CFS)    (MIN.)   (INCH/HOUR)    (ACRE)
     1       20.54     5.13        6.479         5.20
     2        3.45    11.08        3.943         2.50

  RAINFALL INTENSITY AND TIME OF CONCENTRATION RATIO
  CONFLUENCE FORMULA USED FOR  2 STREAMS.

  ** PEAK FLOW RATE TABLE **
  STREAM     RUNOFF      Tc      INTENSITY
  NUMBER      (CFS)    (MIN.)   (INCH/HOUR)
     1       22.14     5.13        6.479
     2       15.95    11.08        3.943

  COMPUTED CONFLUENCE ESTIMATES ARE AS FOLLOWS:
  PEAK FLOW RATE(CFS) =     22.14   Tc(MIN.) =    5.13
  TOTAL AREA(ACRES) =      7.70
  LONGEST FLOWPATH FROM NODE   1101.00 TO NODE   1150.00 =  1293.00 FEET.

****************************************************************************
  FLOW PROCESS FROM NODE   1150.00 TO NODE   1190.00 IS CODE =  31
----------------------------------------------------------------------------
  >>>>>COMPUTE PIPE-FLOW TRAVEL TIME THRU SUBAREA<<<<<
  >>>>>USING COMPUTER-ESTIMATED PIPESIZE (NON-PRESSURE FLOW)<<<<<
============================================================================
  ELEVATION DATA: UPSTREAM(FEET) =   504.00  DOWNSTREAM(FEET) =   494.00
  FLOW LENGTH(FEET) =    60.00   MANNING'S N =  0.013
  ESTIMATED PIPE DIAMETER(INCH) INCREASED TO 18.000
  DEPTH OF FLOW IN  18.0 INCH PIPE IS   9.5 INCHES
  PIPE-FLOW VELOCITY(FEET/SEC.) =  23.51
  ESTIMATED PIPE DIAMETER(INCH) =  18.00    NUMBER OF PIPES =   1
  PIPE-FLOW(CFS) =     22.14
  PIPE TRAVEL TIME(MIN.) =   0.04    Tc(MIN.) =   5.17
  LONGEST FLOWPATH FROM NODE   1101.00 TO NODE   1190.00 =  1353.00 FEET.

****************************************************************************
  FLOW PROCESS FROM NODE   1190.00 TO NODE   1190.00 IS CODE =   1
----------------------------------------------------------------------------
  >>>>>DESIGNATE INDEPENDENT STREAM FOR CONFLUENCE<<<<<
============================================================================
  TOTAL NUMBER OF STREAMS =  2
  CONFLUENCE VALUES USED FOR INDEPENDENT STREAM  1 ARE:
  TIME OF CONCENTRATION(MIN.) =   5.17
  RAINFALL INTENSITY(INCH/HR) =   6.45
  TOTAL STREAM AREA(ACRES) =     7.70
  PEAK FLOW RATE(CFS) AT CONFLUENCE =     22.14
```

```
****************************************************************************
  FLOW PROCESS FROM NODE   1151.00 TO NODE   1155.00 IS CODE =  21
----------------------------------------------------------------------------
  >>>>>RATIONAL METHOD INITIAL SUBAREA ANALYSIS<<<<<
============================================================================
  *USER SPECIFIED(SUBAREA):
  USER-SPECIFIED RUNOFF COEFFICIENT = .3500
  S.C.S. CURVE NUMBER (AMC II) =   0
  INITIAL SUBAREA FLOW-LENGTH(FEET) =    90.00
  UPSTREAM ELEVATION(FEET) =    508.00
  DOWNSTREAM ELEVATION(FEET) =    506.00
  ELEVATION DIFFERENCE(FEET) =      2.00
  SUBAREA OVERLAND TIME OF FLOW(MIN.) =    8.792
  WARNING: INITIAL SUBAREA FLOW PATH LENGTH IS GREATER THAN
           THE MAXIMUM OVERLAND FLOW LENGTH =    72.22
           (Reference: Table 3-1B of Hydrology Manual)
           THE MAXIMUM OVERLAND FLOW LENGTH IS USED IN Tc CALCULATION!
   100 YEAR RAINFALL INTENSITY(INCH/HOUR) =  4.577
  SUBAREA RUNOFF(CFS) =      2.08
  TOTAL AREA(ACRES) =      1.30   TOTAL RUNOFF(CFS) =      2.08

****************************************************************************
  FLOW PROCESS FROM NODE   1155.00 TO NODE   1160.00 IS CODE =  31
----------------------------------------------------------------------------
  >>>>>COMPUTE PIPE-FLOW TRAVEL TIME THRU SUBAREA<<<<<
  >>>>>USING COMPUTER-ESTIMATED PIPESIZE (NON-PRESSURE FLOW)<<<<<
============================================================================
  ELEVATION DATA: UPSTREAM(FEET) =   506.00  DOWNSTREAM(FEET) =   494.00
  FLOW LENGTH(FEET) =    70.00   MANNING'S N =  0.013
  ESTIMATED PIPE DIAMETER(INCH) INCREASED TO 18.000
  DEPTH OF FLOW IN  18.0 INCH PIPE IS   2.7 INCHES
  PIPE-FLOW VELOCITY(FEET/SEC.) =  12.22
  ESTIMATED PIPE DIAMETER(INCH) =  18.00    NUMBER OF PIPES =   1
  PIPE-FLOW(CFS) =      2.08
  PIPE TRAVEL TIME(MIN.) =   0.10    Tc(MIN.) =   8.89
  LONGEST FLOWPATH FROM NODE   1151.00 TO NODE   1160.00 =   160.00 FEET.

****************************************************************************
  FLOW PROCESS FROM NODE   1160.00 TO NODE   1190.00 IS CODE =  51
----------------------------------------------------------------------------
  >>>>>COMPUTE TRAPEZOIDAL CHANNEL FLOW<<<<<
  >>>>>TRAVELTIME THRU SUBAREA (EXISTING ELEMENT)<<<<<
============================================================================
  ELEVATION DATA: UPSTREAM(FEET) =    494.00  DOWNSTREAM(FEET) =    493.00
  CHANNEL LENGTH THRU SUBAREA(FEET) =   395.00   CHANNEL SLOPE =  0.0025
  CHANNEL BASE(FEET) =    2.00   "Z" FACTOR =   3.000
  MANNING'S FACTOR = 0.040   MAXIMUM DEPTH(FEET) =  10.00
   100 YEAR RAINFALL INTENSITY(INCH/HOUR) =  3.190
  *USER SPECIFIED(SUBAREA):
  USER-SPECIFIED RUNOFF COEFFICIENT = .6300
  S.C.S. CURVE NUMBER (AMC II) =   0
  TRAVEL TIME COMPUTED USING ESTIMATED FLOW(CFS) =      2.38
  TRAVEL TIME THRU SUBAREA BASED ON VELOCITY(FEET/SEC.) =   1.01
  AVERAGE FLOW DEPTH(FEET) =   0.61   TRAVEL TIME(MIN.) =   6.50
  Tc(MIN.) =  15.39
  SUBAREA AREA(ACRES) =     0.30       SUBAREA RUNOFF(CFS) =    0.60
  AREA-AVERAGE RUNOFF COEFFICIENT =  0.402
  TOTAL AREA(ACRES) =      1.60         PEAK FLOW RATE(CFS) =       2.08

  END OF SUBAREA CHANNEL FLOW HYDRAULICS:
```

```
  DEPTH(FEET) =  0.58   FLOW VELOCITY(FEET/SEC.) =   0.97
  LONGEST FLOWPATH FROM NODE   1151.00 TO NODE   1190.00 =   555.00 FEET.

****************************************************************************
  FLOW PROCESS FROM NODE   1190.00 TO NODE   1190.00 IS CODE =   1
----------------------------------------------------------------------------
  >>>>>DESIGNATE INDEPENDENT STREAM FOR CONFLUENCE<<<<<
  >>>>>AND COMPUTE VARIOUS CONFLUENCED STREAM VALUES<<<<<
============================================================================
  TOTAL NUMBER OF STREAMS =  2
  CONFLUENCE VALUES USED FOR INDEPENDENT STREAM  2 ARE:
  TIME OF CONCENTRATION(MIN.) =  15.39
  RAINFALL INTENSITY(INCH/HR) =   3.19
  TOTAL STREAM AREA(ACRES) =     1.60
  PEAK FLOW RATE(CFS) AT CONFLUENCE =      2.08

  ** CONFLUENCE DATA **
  STREAM     RUNOFF      Tc      INTENSITY      AREA
  NUMBER      (CFS)    (MIN.)   (INCH/HOUR)    (ACRE)
     1       22.14     5.17        6.445         7.70
     2        2.08    15.39        3.190         1.60

  RAINFALL INTENSITY AND TIME OF CONCENTRATION RATIO
  CONFLUENCE FORMULA USED FOR  2 STREAMS.

  ** PEAK FLOW RATE TABLE **
  STREAM     RUNOFF      Tc      INTENSITY
  NUMBER      (CFS)    (MIN.)   (INCH/HOUR)
     1       22.84     5.17       6.445
     2       13.04    15.39       3.190

  COMPUTED CONFLUENCE ESTIMATES ARE AS FOLLOWS:
  PEAK FLOW RATE(CFS) =     22.84   Tc(MIN.) =    5.17
  TOTAL AREA(ACRES) =      9.30
  LONGEST FLOWPATH FROM NODE   1101.00 TO NODE   1190.00 =  1353.00 FEET.
============================================================================
  END OF STUDY SUMMARY:
  TOTAL AREA(ACRES)      =      9.30  TC(MIN.) =      5.17
  PEAK FLOW RATE(CFS)    =     22.84
============================================================================
============================================================================
  END OF RATIONAL METHOD ANALYSIS
```

```
****************************************************************************

            RATIONAL METHOD HYDROLOGY COMPUTER PROGRAM PACKAGE
            Reference: SAN DIEGO COUNTY FLOOD CONTROL DISTRICT
                          2003,1985,1981 HYDROLOGY MANUAL
         (c) Copyright 1982-2003 Advanced Engineering Software (aes)
             Ver. 1.5A Release Date: 01/01/2003  License ID 1261

                           Analysis prepared by:

                         RICK ENGINEERING COMPANY
                             5620 Friars Road
                        San Diego, California 92110
                      619-291-0707   Fax 619-291-4165

 ************************** DESCRIPTION OF STUDY **************************
* UNIVERSITY PARK AND RESEARCH CENTER (UPRC); J-16693-A                    *
* BASIN 1200; 100-YEAR, 6-HOUR                                             *
* POST-PROJECT (PHASE IV)                                                  *
 ***************************************************************************

  FILE NAME: UP12HP00.RAT
  TIME/DATE OF STUDY: 23:00 02/15/2014
----------------------------------------------------------------------------
  USER SPECIFIED HYDROLOGY AND HYDRAULIC MODEL INFORMATION:
----------------------------------------------------------------------------
  2003 SAN DIEGO MANUAL CRITERIA

  USER SPECIFIED STORM EVENT(YEAR) = 100.00
  6-HOUR DURATION PRECIPITATION (INCHES) =   2.500
  SPECIFIED MINIMUM PIPE SIZE(INCH) =  18.00
  SPECIFIED PERCENT OF GRADIENTS(DECIMAL) TO USE FOR FRICTION SLOPE = 0.90
  SAN DIEGO HYDROLOGY MANUAL "C"-VALUES USED FOR RATIONAL METHOD
  NOTE: USE MODIFIED RATIONAL METHOD PROCEDURES FOR CONFLUENCE ANALYSIS
  *USER-DEFINED STREET-SECTIONS FOR COUPLED PIPEFLOW AND STREETFLOW MODEL*
     HALF-  CROWN TO   STREET-CROSSFALL:   CURB  GUTTER-GEOMETRIES:  MANNING
     WIDTH  CROSSFALL  IN-  / OUT-/PARK-  HEIGHT  WIDTH  LIP   HIKE  FACTOR
NO.   (FT)     (FT)    SIDE / SIDE/ WAY    (FT)    (FT)  (FT)  (FT)    (n)
===  =====  =========  =================  ======  ===== ====== ===== =======
  1   30.0     20.0    0.018/0.018/0.020   0.67    2.00 0.0313 0.167 0.0150

  GLOBAL STREET FLOW-DEPTH CONSTRAINTS:
    1. Relative Flow-Depth =  0.00 FEET
       as (Maximum Allowable Street Flow Depth) - (Top-of-Curb)
    2. (Depth)*(Velocity) Constraint =  6.0 (FT*FT/S)
  *SIZE PIPE WITH A FLOW CAPACITY GREATER THAN
   OR EQUAL TO THE UPSTREAM TRIBUTARY PIPE.*

****************************************************************************
  FLOW PROCESS FROM NODE   1201.00 TO NODE   1205.00 IS CODE =  21
----------------------------------------------------------------------------
  >>>>>RATIONAL METHOD INITIAL SUBAREA ANALYSIS<<<<<
============================================================================
  *USER SPECIFIED(SUBAREA):
  USER-SPECIFIED RUNOFF COEFFICIENT = .8500
  S.C.S. CURVE NUMBER (AMC II) =   0
  INITIAL SUBAREA FLOW-LENGTH(FEET) =    70.00
  UPSTREAM ELEVATION(FEET) =    570.00
  DOWNSTREAM ELEVATION(FEET) =    568.60
  ELEVATION DIFFERENCE(FEET) =      1.40
```

```
  SUBAREA OVERLAND TIME OF FLOW(MIN.) =     2.988
   100 YEAR RAINFALL INTENSITY(INCH/HOUR) =  6.587
  NOTE: RAINFALL INTENSITY IS BASED ON Tc = 5-MINUTE.
  SUBAREA RUNOFF(CFS) =       3.36
  TOTAL AREA(ACRES) =       0.60   TOTAL RUNOFF(CFS) =       3.36

****************************************************************************
  FLOW PROCESS FROM NODE   1205.00 TO NODE   1210.00 IS CODE =  31
----------------------------------------------------------------------------
  >>>>>COMPUTE PIPE-FLOW TRAVEL TIME THRU SUBAREA<<<<<
  >>>>>USING COMPUTER-ESTIMATED PIPESIZE (NON-PRESSURE FLOW)<<<<<
============================================================================
  ELEVATION DATA: UPSTREAM(FEET) =   565.00  DOWNSTREAM(FEET) =   555.00
  FLOW LENGTH(FEET) =   500.00   MANNING'S N =  0.013
  ESTIMATED PIPE DIAMETER(INCH) INCREASED TO 18.000
  DEPTH OF FLOW IN  18.0 INCH PIPE IS   6.0 INCHES
  PIPE-FLOW VELOCITY(FEET/SEC.) =   6.55
  ESTIMATED PIPE DIAMETER(INCH) =  18.00    NUMBER OF PIPES =   1
  PIPE-FLOW(CFS) =       3.36
  PIPE TRAVEL TIME(MIN.) =   1.27    Tc(MIN.) =   4.26
  LONGEST FLOWPATH FROM NODE   1201.00 TO NODE   1210.00 =   570.00 FEET.

****************************************************************************
  FLOW PROCESS FROM NODE   1210.00 TO NODE   1210.00 IS CODE =  81
----------------------------------------------------------------------------
  >>>>>ADDITION OF SUBAREA TO MAINLINE PEAK FLOW<<<<<
============================================================================
   100 YEAR RAINFALL INTENSITY(INCH/HOUR) =  6.587
  NOTE: RAINFALL INTENSITY IS BASED ON Tc = 5-MINUTE.
  *USER SPECIFIED(SUBAREA):
  USER-SPECIFIED RUNOFF COEFFICIENT = .8500
  S.C.S. CURVE NUMBER (AMC II) =   0
  AREA-AVERAGE RUNOFF COEFFICIENT = 0.8500
  SUBAREA AREA(ACRES) =     2.30   SUBAREA RUNOFF(CFS) =   12.88
  TOTAL AREA(ACRES) =       2.90   TOTAL RUNOFF(CFS) =   16.24
  TC(MIN.) =   4.26

****************************************************************************
  FLOW PROCESS FROM NODE   1210.00 TO NODE   1230.00 IS CODE =  31
----------------------------------------------------------------------------
  >>>>>COMPUTE PIPE-FLOW TRAVEL TIME THRU SUBAREA<<<<<
  >>>>>USING COMPUTER-ESTIMATED PIPESIZE (NON-PRESSURE FLOW)<<<<<
============================================================================
  ELEVATION DATA: UPSTREAM(FEET) =   555.00  DOWNSTREAM(FEET) =   505.00
  FLOW LENGTH(FEET) =   570.00   MANNING'S N =  0.013
  ESTIMATED PIPE DIAMETER(INCH) INCREASED TO 18.000
  DEPTH OF FLOW IN  18.0 INCH PIPE IS   9.5 INCHES
  PIPE-FLOW VELOCITY(FEET/SEC.) =  17.10
  ESTIMATED PIPE DIAMETER(INCH) =  18.00    NUMBER OF PIPES =   1
  PIPE-FLOW(CFS) =      16.24
  PIPE TRAVEL TIME(MIN.) =   0.56    Tc(MIN.) =   4.82
  LONGEST FLOWPATH FROM NODE   1201.00 TO NODE   1230.00 =  1140.00 FEET.

****************************************************************************
  FLOW PROCESS FROM NODE   1220.00 TO NODE   1230.00 IS CODE =  81
----------------------------------------------------------------------------
  >>>>>ADDITION OF SUBAREA TO MAINLINE PEAK FLOW<<<<<
============================================================================
   100 YEAR RAINFALL INTENSITY(INCH/HOUR) =  6.587
  NOTE: RAINFALL INTENSITY IS BASED ON Tc = 5-MINUTE.
  *USER SPECIFIED(SUBAREA):
```

```
  USER-SPECIFIED RUNOFF COEFFICIENT = .8700
  S.C.S. CURVE NUMBER (AMC II) =   0
  AREA-AVERAGE RUNOFF COEFFICIENT = 0.8513
  SUBAREA AREA(ACRES) =     0.20   SUBAREA RUNOFF(CFS) =     1.15
  TOTAL AREA(ACRES) =       3.10   TOTAL RUNOFF(CFS) =    17.38
  TC(MIN.) =   4.82

****************************************************************************
  FLOW PROCESS FROM NODE   1225.00 TO NODE   1230.00 IS CODE =  81
----------------------------------------------------------------------------
  >>>>>ADDITION OF SUBAREA TO MAINLINE PEAK FLOW<<<<<
============================================================================
   100 YEAR RAINFALL INTENSITY(INCH/HOUR) =  6.587
  NOTE: RAINFALL INTENSITY IS BASED ON Tc = 5-MINUTE.
  *USER SPECIFIED(SUBAREA):
  USER-SPECIFIED RUNOFF COEFFICIENT = .8700
  S.C.S. CURVE NUMBER (AMC II) =   0
  AREA-AVERAGE RUNOFF COEFFICIENT = 0.8524
  SUBAREA AREA(ACRES) =     0.20   SUBAREA RUNOFF(CFS) =     1.15
  TOTAL AREA(ACRES) =       3.30   TOTAL RUNOFF(CFS) =    18.53
  TC(MIN.) =   4.82

****************************************************************************
  FLOW PROCESS FROM NODE   1215.00 TO NODE   1230.00 IS CODE =  81
----------------------------------------------------------------------------
  >>>>>ADDITION OF SUBAREA TO MAINLINE PEAK FLOW<<<<<
============================================================================
   100 YEAR RAINFALL INTENSITY(INCH/HOUR) =  6.587
  NOTE: RAINFALL INTENSITY IS BASED ON Tc = 5-MINUTE.
  *USER SPECIFIED(SUBAREA):
  USER-SPECIFIED RUNOFF COEFFICIENT = .3500
  S.C.S. CURVE NUMBER (AMC II) =   0
  AREA-AVERAGE RUNOFF COEFFICIENT = 0.6515
  SUBAREA AREA(ACRES) =     2.20   SUBAREA RUNOFF(CFS) =     5.07
  TOTAL AREA(ACRES) =       5.50   TOTAL RUNOFF(CFS) =    23.60
  TC(MIN.) =   4.82

****************************************************************************
  FLOW PROCESS FROM NODE   1230.00 TO NODE   1250.00 IS CODE =  31
----------------------------------------------------------------------------
  >>>>>COMPUTE PIPE-FLOW TRAVEL TIME THRU SUBAREA<<<<<
  >>>>>USING COMPUTER-ESTIMATED PIPESIZE (NON-PRESSURE FLOW)<<<<<
============================================================================
  ELEVATION DATA: UPSTREAM(FEET) =   505.00  DOWNSTREAM(FEET) =   504.50
  FLOW LENGTH(FEET) =    70.00   MANNING'S N =  0.013
  DEPTH OF FLOW IN  27.0 INCH PIPE IS  21.0 INCHES
  PIPE-FLOW VELOCITY(FEET/SEC.) =   7.11
  ESTIMATED PIPE DIAMETER(INCH) =  27.00    NUMBER OF PIPES =   1
  PIPE-FLOW(CFS) =     23.60
  PIPE TRAVEL TIME(MIN.) =   0.16    Tc(MIN.) =   4.98
  LONGEST FLOWPATH FROM NODE   1201.00 TO NODE   1250.00 =  1210.00 FEET.

****************************************************************************
  FLOW PROCESS FROM NODE   1250.00 TO NODE   1255.00 IS CODE =  51
----------------------------------------------------------------------------
  >>>>>COMPUTE TRAPEZOIDAL CHANNEL FLOW<<<<<
  >>>>>TRAVELTIME THRU SUBAREA (EXISTING ELEMENT)<<<<<
============================================================================
  ELEVATION DATA: UPSTREAM(FEET) =    504.50  DOWNSTREAM(FEET) =    504.40
  CHANNEL LENGTH THRU SUBAREA(FEET) =   120.00   CHANNEL SLOPE =  0.0008
  CHANNEL BASE(FEET) =    3.00   "Z" FACTOR =   4.000
```

```
MANNING'S FACTOR = 0.035   MAXIMUM DEPTH(FEET) =  10.00
 100 YEAR RAINFALL INTENSITY(INCH/HOUR) =  5.537
*USER SPECIFIED(SUBAREA):
USER-SPECIFIED RUNOFF COEFFICIENT = .3500
S.C.S. CURVE NUMBER (AMC II) =   0
TRAVEL TIME COMPUTED USING ESTIMATED FLOW(CFS) =     25.16
TRAVEL TIME THRU SUBAREA BASED ON VELOCITY(FEET/SEC.) =   1.28
AVERAGE FLOW DEPTH(FEET) =   1.87   TRAVEL TIME(MIN.) =   1.56
Tc(MIN.) =   6.54
SUBAREA AREA(ACRES) =     1.60       SUBAREA RUNOFF(CFS) =    3.10
AREA-AVERAGE RUNOFF COEFFICIENT =  0.584
TOTAL AREA(ACRES) =      7.10         PEAK FLOW RATE(CFS) =      23.60

END OF SUBAREA CHANNEL FLOW HYDRAULICS:
DEPTH(FEET) =  1.82   FLOW VELOCITY(FEET/SEC.) =   1.26
LONGEST FLOWPATH FROM NODE   1201.00 TO NODE   1255.00 =  1330.00 FEET.

****************************************************************************
FLOW PROCESS FROM NODE   1255.00 TO NODE   1260.00 IS CODE =  51
----------------------------------------------------------------------------
>>>>>COMPUTE TRAPEZOIDAL CHANNEL FLOW<<<<<
>>>>>TRAVELTIME THRU SUBAREA (EXISTING ELEMENT)<<<<<
============================================================================
ELEVATION DATA: UPSTREAM(FEET) =    504.00  DOWNSTREAM(FEET) =    502.00
CHANNEL LENGTH THRU SUBAREA(FEET) =    65.00   CHANNEL SLOPE =  0.0308
CHANNEL BASE(FEET) =    3.00   "Z" FACTOR =   5.000
MANNING'S FACTOR = 0.040   MAXIMUM DEPTH(FEET) =  10.00
 100 YEAR RAINFALL INTENSITY(INCH/HOUR) =  5.400
*USER SPECIFIED(SUBAREA):
USER-SPECIFIED RUNOFF COEFFICIENT = .3500
S.C.S. CURVE NUMBER (AMC II) =   0
TRAVEL TIME COMPUTED USING ESTIMATED FLOW(CFS) =     24.36
TRAVEL TIME THRU SUBAREA BASED ON VELOCITY(FEET/SEC.) =   4.17
AVERAGE FLOW DEPTH(FEET) =   0.82   TRAVEL TIME(MIN.) =   0.26
Tc(MIN.) =   6.80
SUBAREA AREA(ACRES) =     0.80       SUBAREA RUNOFF(CFS) =    1.51
AREA-AVERAGE RUNOFF COEFFICIENT =  0.560
TOTAL AREA(ACRES) =      7.90         PEAK FLOW RATE(CFS) =      23.88

END OF SUBAREA CHANNEL FLOW HYDRAULICS:
DEPTH(FEET) =  0.81   FLOW VELOCITY(FEET/SEC.) =   4.15
LONGEST FLOWPATH FROM NODE   1201.00 TO NODE   1260.00 =  1395.00 FEET.

****************************************************************************
FLOW PROCESS FROM NODE   1260.00 TO NODE   1290.00 IS CODE =  31
----------------------------------------------------------------------------
>>>>>COMPUTE PIPE-FLOW TRAVEL TIME THRU SUBAREA<<<<<
>>>>>USING COMPUTER-ESTIMATED PIPESIZE (NON-PRESSURE FLOW)<<<<<
============================================================================
ELEVATION DATA: UPSTREAM(FEET) =   502.00  DOWNSTREAM(FEET) =   493.00
FLOW LENGTH(FEET) =    70.00   MANNING'S N =  0.013
DEPTH OF FLOW IN  18.0 INCH PIPE IS  10.8 INCHES
PIPE-FLOW VELOCITY(FEET/SEC.) =  21.66
ESTIMATED PIPE DIAMETER(INCH) =  18.00    NUMBER OF PIPES =   1
PIPE-FLOW(CFS) =     23.88
PIPE TRAVEL TIME(MIN.) =   0.05    Tc(MIN.) =   6.86
LONGEST FLOWPATH FROM NODE   1201.00 TO NODE   1290.00 =  1465.00 FEET.
============================================================================
END OF STUDY SUMMARY:
TOTAL AREA(ACRES)      =      7.90  TC(MIN.) =      6.86
PEAK FLOW RATE(CFS)    =     23.88
```

==========
==========
END OF RATIONAL METHOD ANALYSIS

APPENDIX C

Hydrologic Supporting Materials

Table 3-1
RUNOFF COEFFICIENTS FOR URBAN AREAS

Land Use		Runoff Coefficient "C"				
			Soil Type			
NRCS Elements	County Elements	% IMPER.	A	B	C	D
Undisturbed Natural Terrain (Natural)	Permanent Open Space	0*	0.20	0.25	0.30	0.35
Low Density Residential (LDR)	Residential, 1.0 DU/A or less	10	0.27	0.32	0.36	0.41
Low Density Residential (LDR)	Residential, 2.0 DU/A or less	20	0.34	0.38	0.42	0.46
Low Density Residential (LDR)	Residential, 2.9 DU/A or less	25	0.38	0.41	0.45	0.49
Medium Density Residential (MDR)	Residential, 4.3 DU/A or less	30	0.41	0.45	0.48	0.52
Medium Density Residential (MDR)	Residential, 7.3 DU/A or less	40	0.48	0.51	0.54	0.57
Medium Density Residential (MDR)	Residential, 10.9 DU/A or less	45	0.52	0.54	0.57	0.60
Medium Density Residential (MDR)	Residential, 14.5 DU/A or less	50	0.55	0.58	0.60	0.63
High Density Residential (HDR)	Residential, 24.0 DU/A or less	65	0.66	0.67	0.69	0.71
High Density Residential (HDR)	Residential, 43.0 DU/A or less	80	0.76	0.77	0.78	0.79
Commercial/Industrial (N. Com)	Neighborhood Commercial	80	0.76	0.77	0.78	0.79
Commercial/Industrial (G. Com)	General Commercial	85	0.80	0.80	0.81	0.82
Commercial/Industrial (O.P. Com)	Office Professional/Commercial	90	0.83	0.84	0.84	0.85
Commercial/Industrial (Limited I.)	Limited Industrial	90	0.83	0.84	0.84	0.85
Commercial/Industrial (General I.)	General Industrial	95	0.87	0.87	0.87	0.87

*The values associated with 0% impervious may be used for direct calculation of the runoff coefficient as described in Section 3.1.2 (representing the pervious runoff coefficient, Cp, for the soil type), or for areas that will remain undisturbed in perpetuity. Justification must be given that the area will remain natural forever (e.g., the area is located in Cleveland National Forest).
DU/A = dwelling units per acre
NRCS = National Resources Conservation Service

3-203.1 **Previously Approved Reports** - Runoff quantities; as set forth or derived from the report prepared by Lawrence, Fogg, Florer and Smith titled "A Special Study of Storm Drain Facilities" on file in the office of the City Engineer may be used in the design of drainage facilities in Chula Vista. A hydrologic study prepared and approved at General Development Plan (GDP) or Specific Planning Area (SPA) plan may be used as determined by the City Engineer.

3-203.2 For local drainage basins, storm discharge flow may be estimated based on the Rational Method or the Modified Rational Method. For all lateral and major drainage basins the SCS method, U.S. Army Corps of Engineers HEC-1 computer method or other tabular or computer method may be used upon City Engineer approval.

3-203.3 **Rational and Modified Rational Methods**

(1) The rational method equation relates storm rainfall intensity (I), a selected runoff coefficient (C) and drainage area (A) to the peak runoff rate (Q):

$$Q = CIA \text{ (Empirical Units)}$$

where:

Q = Peak runoff in cubic feet per second
C = Runoff coefficient
I = Intensity, inches per hours
A = Drainage basin area in acres

Or

$$Q=0.278CIA \text{ (Metric Units)}$$

where:

Q = Peak runoff in cubic meters per second
C = Runoff coefficient
I = Intensity in millimeters per second
A = Drainage area in square kilometers

(2) Coefficient of Runoff: Consider probable development. Use highest number of the following values:

a)	Paved Surface	0.90
b)	Commercial Area	0.85
c)	Dense Residential (R2, R3)	0.75
d)	Normal Residential (R1)	0.65
e)	Suburban Property (RE)	0.55
f)	Barren Slopes Steep	0.80
g)	Barren Slopes Hilly	0.75
h)	" " Rolling	0.70
i)	" " Flat	0.65
j)	Vegetated Slopes Steep	0.60
k)	" " Hilly	0.55
l)	" " Rolling	0.50
m)	" " Flat	0.45

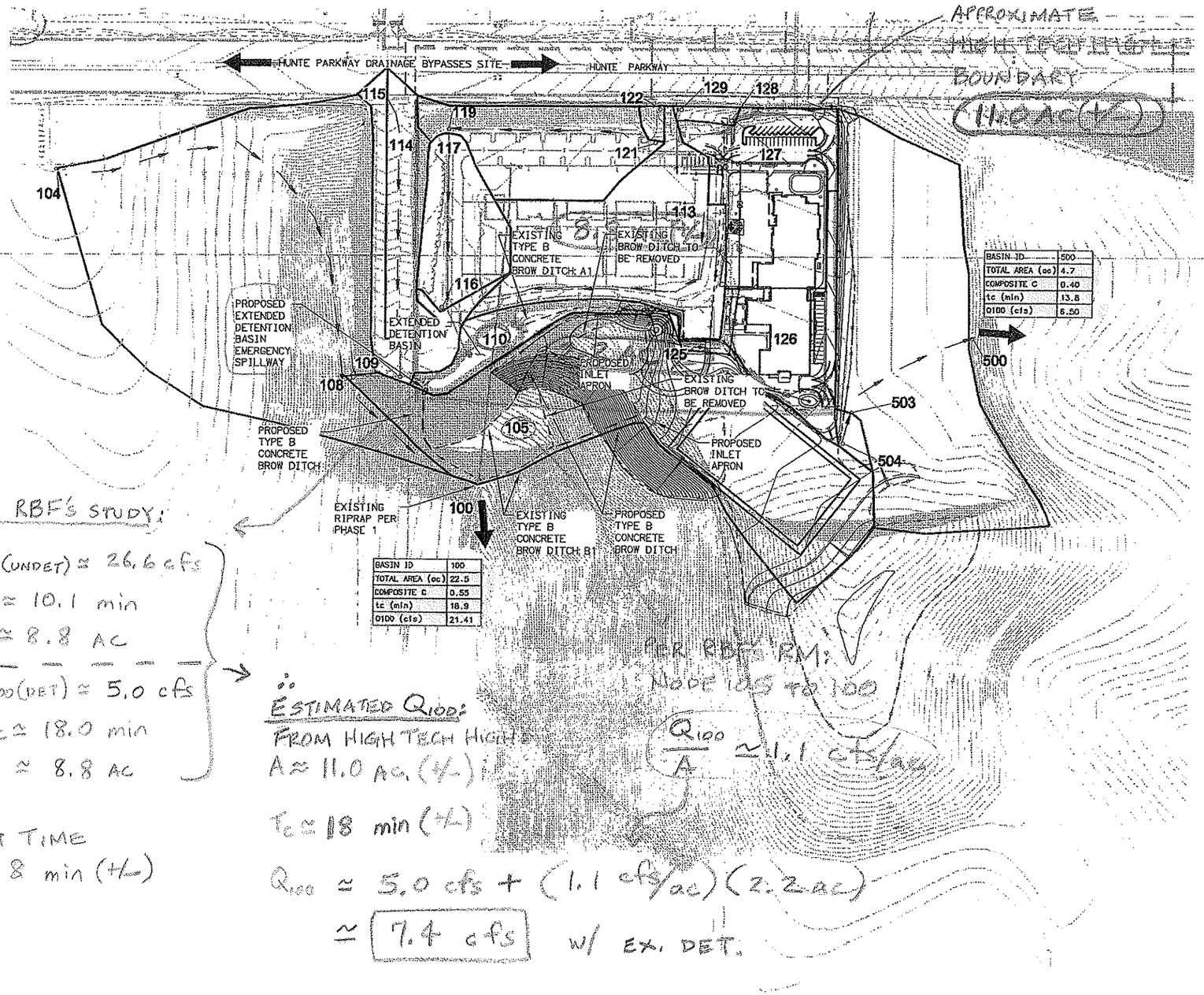

BASIN ID	500
TOTAL AREA (ac)	4.7
COMPOSITE C	0.40
tc (min)	13.8
Q100 (cfs)	6.50

BASIN ID	100
TOTAL AREA (ac)	22.5
COMPOSITE C	0.55
tc (min)	18.9
Q100 (cfs)	21.41

LEGEND:

BASIN ID	300
TOTAL AREA (ac)	0.3
COMPOSITE C	0.85
tc (min)	6.0
Q100 (cfs)	1.1

BASIN HYDROLOGIC RESULTS

100 NODE ID

LIMIT OF WORK

BASIN LIMIT

DIRECTION OF FLOW

ULTIMATE OUTFALL

BROW DITCH

80 0 80 160 240
SCALE: 1"=80'

PER RBF'S STUDY:

$Q_{100}(UNDET) \simeq 26.6$ cfs
$T_c \simeq 10.1$ min
$A \simeq 8.8$ AC

$Q_{100}(DET) \simeq 5.0$ cfs
$T_c \simeq 18.0$ min
$A \simeq 8.8$ AC

LAG TIME
~ 8 min (+/-)

ESTIMATED Q_{100}:
FROM HIGH TECH HIGH
$A \approx 11.0$ AC. (+/-)
$T_c \simeq 18$ min (+/-)
$Q_{100} \simeq 5.0$ cfs $+ (1.1$ cfs/ac$)(2.2$ ac$)$
$\simeq$ 7.4 cfs w/ EX. DET.

PER RBF'S FM:
NODE 105 TO 100
$\frac{Q_{100}}{A} \simeq 1.1$ cfs/ac

BACKUP INFO TO ESTIMATE Q_{100} FROM HIGH TECH HIGH

FOR UNIVERSITY PARK AND INNOVATION DISTRICT

HIGH TECH HIGH - PHASE 2
DRAINAGE DESIGN ANALYSIS
PROPOSED CONDITION HYDROLOGY MAP

RBF CONSULTING

APPENDIX D

Storm Drain Design

UNIVERSITY PARK AND RESEARCH CENTER
J-16693-A
FEBRUARY 14, 2013

PHASE III - CONCEPTUAL STORM DRAIN SIZING FOR PROPOSED 72-INCH PIPE
(RUNOFF FROM BASINS 300, 400, 500, 600 & 700 COMBINED)

NOTE: THE SLOPE FOR THE PHASE III PROPOSED GRADING IS ANTICIPATED TO RANGE FROM APPROXIMATELY 1.5% TO 2.0%. THEREFORE, THE FOLLOWING CALCULATION FOR PHASE III IS BASED ON STORM DRAIN SLOPE = 1.5%.

NORMAL DEPTH FOR CIRCULAR PIPES
COPYRIGHT 1992 RICK ENGINEERING COMPANY
PIPE PHASE III - PROPOSED 72-INCH RCP (BASINS 300, 400, 500, 600 & 700)

DISCHARGE IS =	444.70	CFS	SLOPE IS =	0.0150	FT/FT
DIAMETER IS =	6.00	FT	MANNING'S N =	0.013	
NORMAL DEPTH IS =	4.28	FT	CAPACITY IS =	518.69	CFS
VELOCITY IS =	20.62	FPS	FROUDE NUMBER IS =	1.82	
AREA IS =	21.57	SQ FT	VELOCITY HEAD IS =	6.60	FT
HYDRAULIC RADIUS =	1.79	FT	CRITICAL DEPTH =	5.52	FT
WETTED PERIMETER =	12.07	FT	CRITICAL VELOCITY =	16.36	FPS
TOP WIDTH IS =	5.43	FT			

PHASE IV - CONCEPTUAL STORM DRAIN SIZING @ OUTFALL TO BIORETENTION BASIN

NOTE: THE FOLLOWING CALCULATIONS FOR IS BASED ON STORM DRAIN SLOPE = 1.0%.

NORMAL DEPTH FOR CIRCULAR PIPES
COPYRIGHT 1992 RICK ENGINEERING COMPANY
PIPE PHASE IV - PROPOSED 24-INCH RCP FOR BASIN 1100

DISCHARGE IS =	19.50	CFS	SLOPE IS =	0.0100	FT/FT
DIAMETER IS =	2.00	FT	MANNING'S N =	0.013	
NORMAL DEPTH IS =	1.43	FT	CAPACITY IS =	22.62	CFS
VELOCITY IS =	8.10	FPS	FROUDE NUMBER IS =	1.24	
AREA IS =	2.41	SQ FT	VELOCITY HEAD IS =	1.02	FT
HYDRAULIC RADIUS =	0.60	FT	CRITICAL DEPTH =	1.59	FT
WETTED PERIMETER =	4.04	FT	CRITICAL VELOCITY =	7.29	FPS
TOP WIDTH IS =	1.80	FT			

NORMAL DEPTH FOR CIRCULAR PIPES
COPYRIGHT 1992 RICK ENGINEERING COMPANY
PIPE PHASE IV - PROPOSED 30-INCH RCP FOR BASIN 1200

DISCHARGE IS =	30.80	CFS	SLOPE IS =	0.0100	FT/FT
DIAMETER IS =	2.50	FT	MANNING'S N =	0.013	
NORMAL DEPTH IS =	1.62	FT	CAPACITY IS =	41.02	CFS
VELOCITY IS =	9.17	FPS	FROUDE NUMBER IS =	1.36	
AREA IS =	3.36	SQ FT	VELOCITY HEAD IS =	1.31	FT
HYDRAULIC RADIUS =	0.72	FT	CRITICAL DEPTH =	1.89	FT
WETTED PERIMETER =	4.67	FT	CRITICAL VELOCITY =	7.73	FPS
TOP WIDTH IS =	2.39	FT			

APPENDIX E

Riprap Design

University and Innovation District (UID)
J-16693-A
September 17, 2015

Conceptual Riprap Design Summary

Outfall @ Bioretention Basin	Pipe Size[1] (in)	Estimated Peak Flow Rate (cfs [2])	Velocity @ exit[3] (ft/sec)	Anticipated Rock Size[3] (ton)	Anticipated Riprap Length (ft)	Riprap Width (ft)	Riprap Thickness (ft)
Phase III (Basins 300, 400, 500, 600 & 700)	72	422.0	17	2	35	48	5.4
Phase IV (Basin 1100)	24	19.5	12	1/4	20	16	2.7
Phase IV (Basin 1200)	30	30.8	13	1/2	20	20	3.5

Note:
1. Preliminary pipe sizes were determined based on normal depth calculations. Detailed hydraulic calculations are anticipated during final engineering.
2. "cfs" = cubic feet per second
3. At the conceptual level, the exit velocity at each outfall was assumed as shown above based on peak flow rate and assumed slopes of 1.0% for Phase III and 2.5% for both Phase IV Basins. It is anticipated that the storm drain outfalls will be designed such that the exit velocity will not exceed these values. The proposed storm drain outfalls will be designed to dissipate energy and minimize potential erosion.
Detailed calculations are anticipated during final engineering.

Table 7–1 (below) per July 2005
San Diego County Drainage Design Manual

Design Velocity ft/sec*	Rock Class	Rip–Rap Thickness "T" (min)
6–10	No. 2 backing	1.1ft
10–12	1/4 ton	2.7ft
12–14	1/2 ton	3.5ft
14–16	1 ton	4.4ft
16–18	2 ton	5.4ft

*over 20 ft/sec requires special design

D = Pipe Diameter
W = Bottom Width of Channel

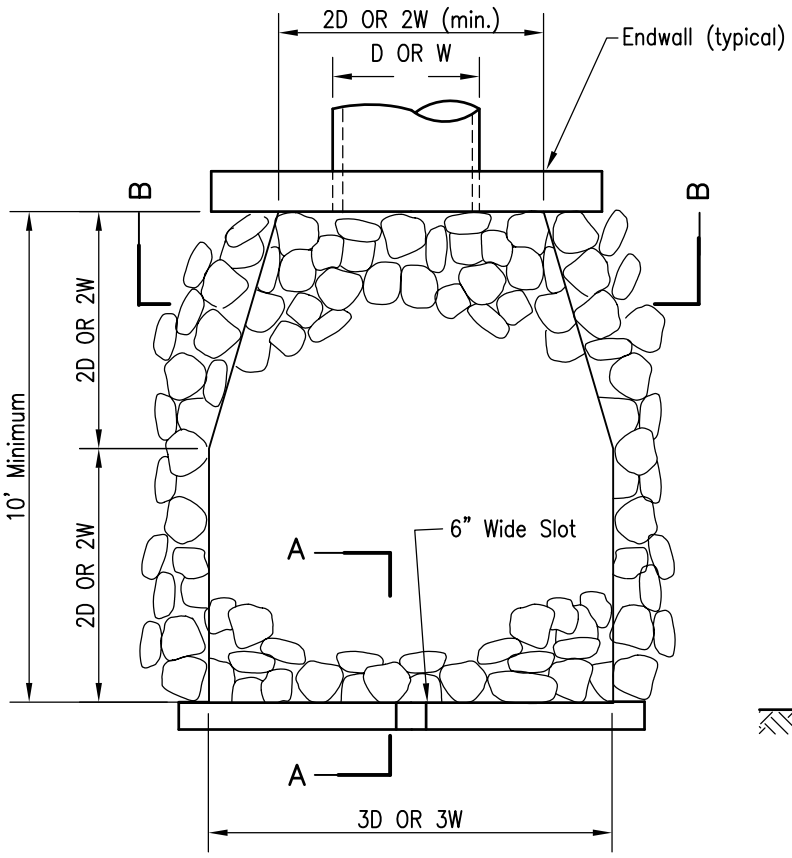

PLAN

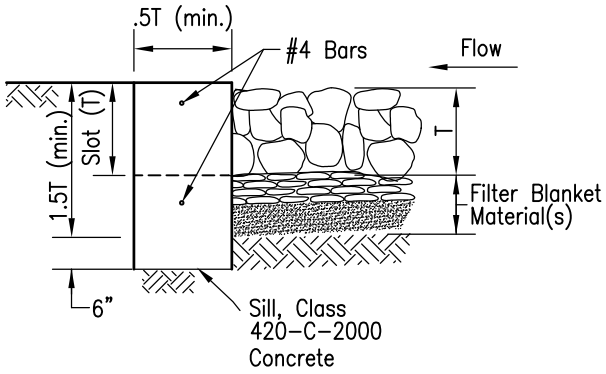

SECTION A–A

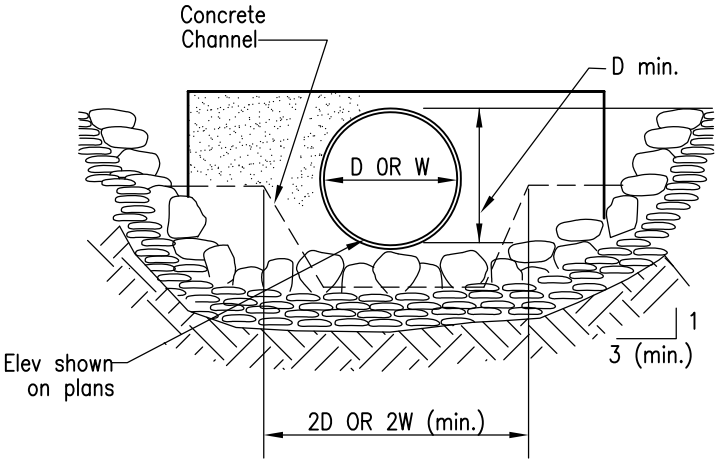

SECTION B–B

NOTES

1. Plans shall specify:
   (A) Rock Class and rip–rap thickness (T). T shall be at least 1.5 times the nominal equivalent diameter of stone (d_{50}) of the specified rip–rap.
   (B) Filter blanket material, number of layers and thickness.
2. Rip rap shall be either quarry stone or broken concrete (if shown on the plans). Cobbles are not acceptable.
3. Rip rap shall be placed over filter blanket material, which may be either granular material or non–woven geotextile filter fabric; material at weight specified in plans or specifications.
4. See Table 200–1.7 in San Diego Regional Supplement to Greenbook for selection of filter blanket.
5. Rip rap energy dissipaters shall be designated as either Type 1 or Type 2. Type 1 shall be with concrete sill; Type 2 shall be without sill.

Revision	By	Approved	Date
ORIGINAL		Kercheval	12/75
Add Metric		T. Stanton	03/03
Add Rip Rap Table		S. Brady	04/06
Edited		T. Stanton	02/09
Edited	S.S.	T. Regello	03/11

SAN DIEGO REGIONAL STANDARD DRAWING

RIP RAP ENERGY DISSIPATER

RECOMMENDED BY THE SAN DIEGO REGIONAL STANDARDS COMMITTEE

7/26/2012

Chairperson R.C.E. 19246 Date

DRAWING NUMBER D-40

Hydraulic Analysis Report

Project Data

Project Title: UNIVERSITY AND INNOVATIONS DISTRICT (UID)

Designer: HC

Project Date: Thursday, September 17, 2015

Project Units: U.S. Customary Units

Notes: NORMAL DEPTH CALCULATIONS

Channel Analysis: PHASE III

Notes: (BASINS 300, 400, 500, 600, & 700)

Input Parameters

Channel Type: Circular

Pipe Diameter: 6.0000 (ft)

Longitudinal Slope: 0.0100 (ft/ft)

Manning's n: 0.0130

Flow: 422.0000 (cfs)

Result Parameters

Depth: 4.8984 (ft)

Area of Flow: 24.7136 (ft^2)

Wetted Perimeter: 13.5358 (ft)

Average Velocity: 17.0756 (ft/s)

Top Width: 4.6459 (ft)

Froude Number: 1.3047

Critical Depth: 5.4287 (ft)

Critical Velocity: 15.6848 (ft/s)

Critical Slope: 0.0087 (ft/ft)

Critical Top Width: 3.5221 (ft)

Calculated Max Shear Stress: 3.0566 (lb/ft^2)

Calculated Avg Shear Stress: 1.1393 (lb/ft^2)

Channel Analysis: PHASE IV (BASIN 1100)

Notes: (BASIN 1100)

Input Parameters

Channel Type: Circular

Pipe Diameter: 2.0000 (ft)

Longitudinal Slope: 0.0250 (ft/ft)

Manning's n: 0.0130

Flow: 19.5000 (cfs)

Result Parameters

Depth: 1.0529 (ft)

Area of Flow: 1.6766 (ft^2)

Wetted Perimeter: 3.2475 (ft)

Average Velocity: 11.6309 (ft/s)

Top Width: 1.9972 (ft)

Froude Number: 2.2371

Critical Depth: 1.5879 (ft)

Critical Velocity: 7.2902 (ft/s)

Critical Slope: 0.0079 (ft/ft)

Critical Top Width: 1.6179 (ft)

Calculated Max Shear Stress: 1.6425 (lb/ft^2)

Calculated Avg Shear Stress: 0.8054 (lb/ft^2)

Channel Analysis: PHASE IV (BASIN 1200)

Notes: (BASIN 1200)

Input Parameters

Channel Type: Circular

Pipe Diameter: 2.5000 (ft)

Longitudinal Slope: 0.0250 (ft/ft)

Manning's n: 0.0130

Flow: 30.8000 (cfs)

Result Parameters

Depth: 1.2129 (ft)

Area of Flow: 2.3616 (ft^2)

Wetted Perimeter: 3.8528 (ft)

Average Velocity: 13.0419 (ft/s)

APPENDIX F

University and Innovation District:
Relative Project Location Exhibit

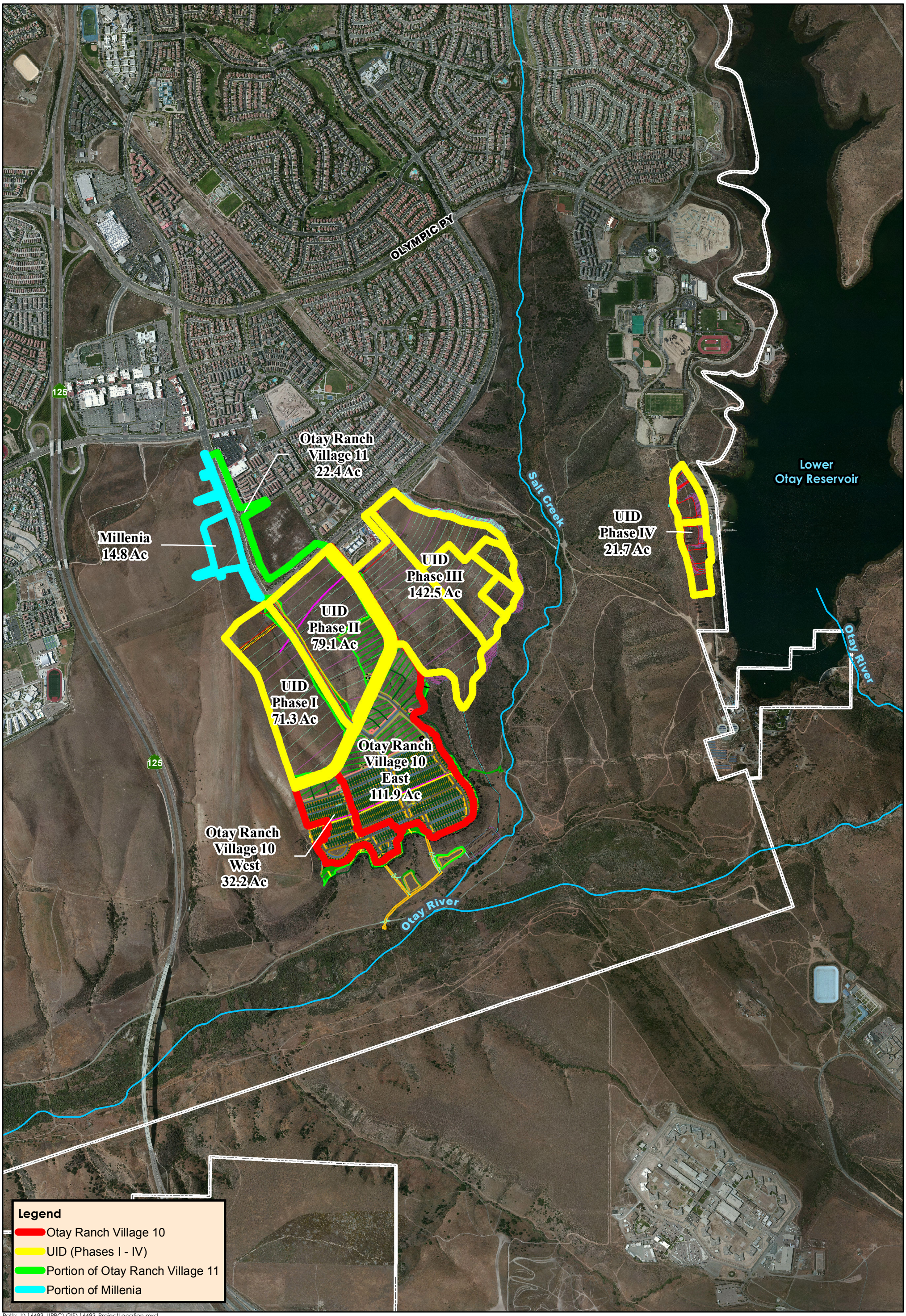

Path: J:\16693_UPRC\GIS\16693_ProjectLocation.mxd

RICK ENGINEERING COMPANY

Scale in Feet
0 1,000 2,000

North

J-16693 A
Date of Exhibit: 09.17.2013
Eagle Aerial Image: 05.2012

UNIVERSITY PARK AND RESEARCH CENTER

University and Innovation District: Relative Project Location Exhibit (Village 10, UID Phase 1, UID Phase II, UID Phase III, UID Phase IV, Portion of Village 11, Portion of Millenia)

MAP POCKET 1

Drainage Study Map
For
University and Innovation District (UID)
[Pre-Project]

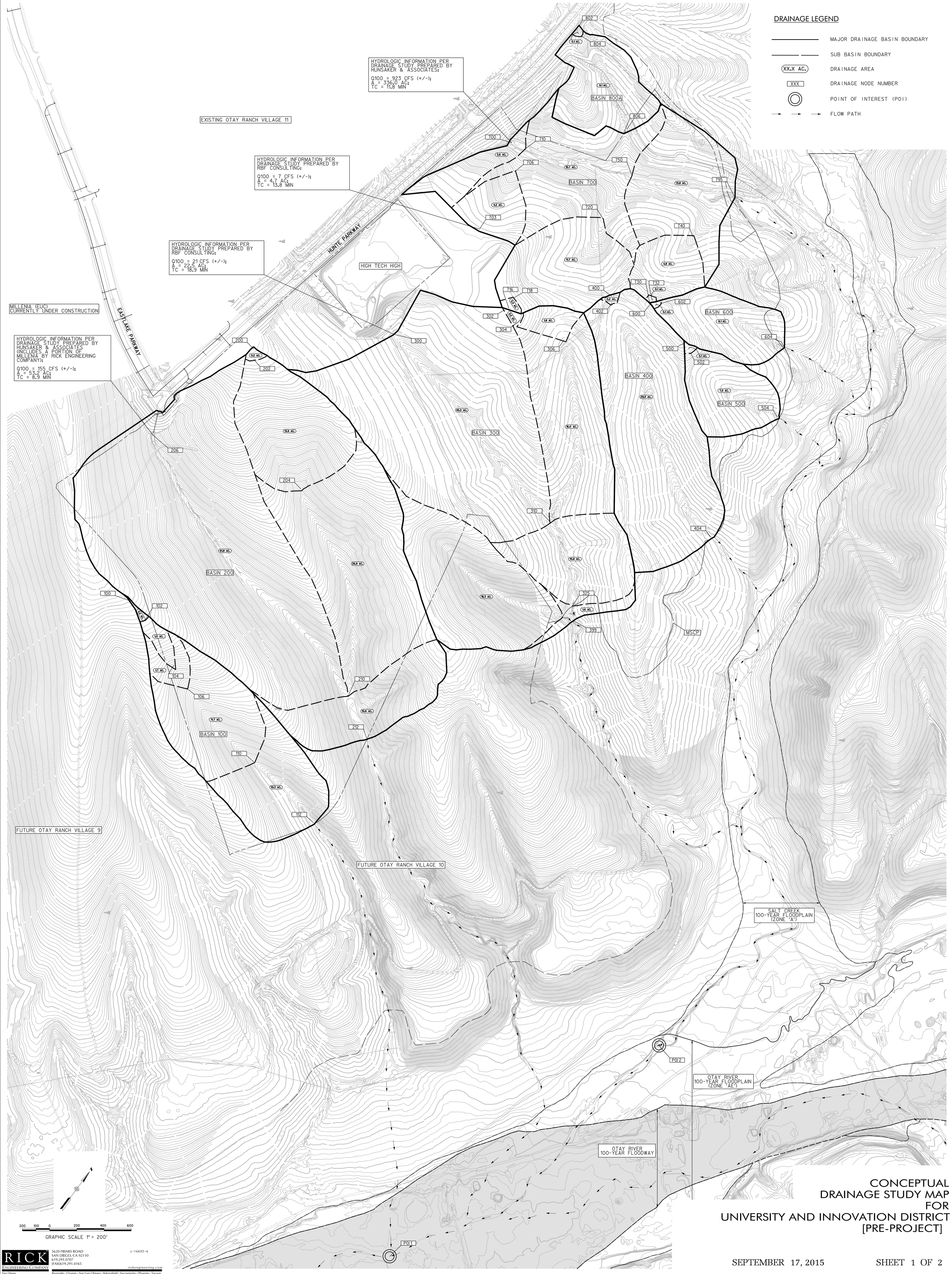

CONCEPTUAL DRAINAGE STUDY MAP FOR UNIVERSITY AND INNOVATION DISTRICT [PRE-PROJECT]

SEPTEMBER 17, 2015

SHEET 1 OF 2

RICK ENGINEERING COMPANY
5620 FRIARS ROAD
SAN DIEGO, CA 92110
619.291.0707
(FAX)619.291.4165
J-16693-A
rickengineering.com
San Diego Riverside • Orange • San Luis Obispo • Bakersfield • Sacramento • Phoenix • Tucson

© 2014 Rick Engineering Company

J:\16693_UPRC\WaterResource\16693drn_pre01.dgn
J:\16693_UPRC\WaterResource\SD Corp5tds 2005.dscript
18-SEP-2015 10:54

DRAINAGE LEGEND

———	MAJOR DRAINAGE BASIN BOUNDARY
——— ———	SUB BASIN BOUNDARY
(XX.X AC.)	DRAINAGE AREA
[XXX]	DRAINAGE NODE NUMBER
◎	POINT OF INTEREST (POI)
→ → →	FLOW PATH
⇨ ⇨ ⇨ ⇨ ⇨	EXISTING COBBLE DITCH

CONCEPTUAL DRAINAGE STUDY MAP FOR UNIVERSITY AND INNOVATION DISTRICT [PRE-PROJECT]

SEPTEMBER 17, 2015

SHEET 2 OF 2

RICK™ ENGINEERING COMPANY
San Diego
5620 FRIARS ROAD
SAN DIEGO, CA 92110
619.291.0707
(FAX)619.291.4165
rickengineering.com
Riverside - Orange - San Luis Obispo - Bakersfield - Sacramento - Phoenix - Tucson

J-16693-A

© 2014 Rick Engineering Company

J:\16693_UPRC\WaterResource\16693drn_pre02.dgn
J:\16693_UPRC\WaterResource\SD CorpStds 2005.dscript
18-SEP-2015 13:04

MAP POCKET 2

Drainage Study Map
For
University and Innovation District (UID)
[Post-Project]

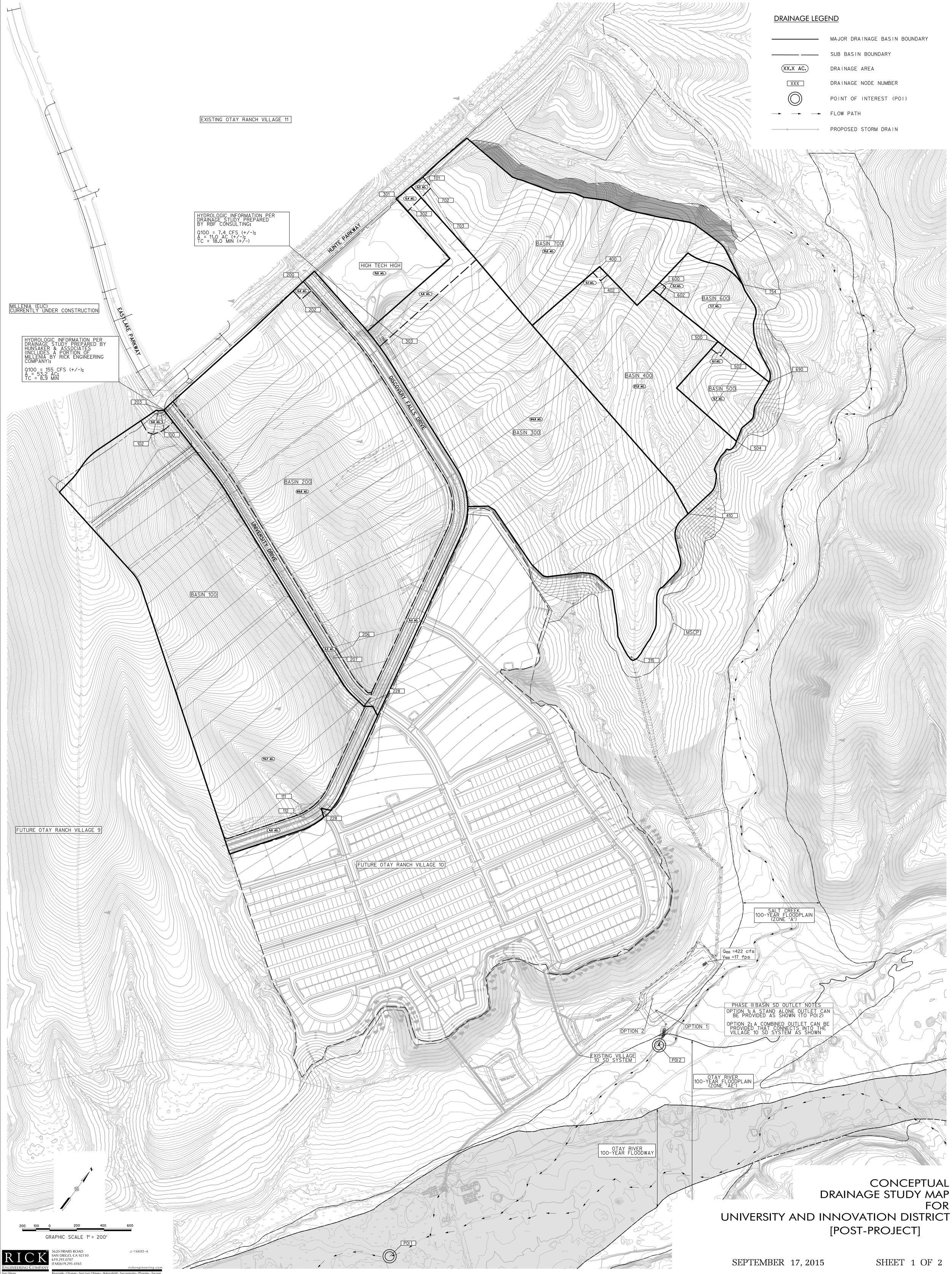

CONCEPTUAL DRAINAGE STUDY MAP FOR UNIVERSITY AND INNOVATION DISTRICT [POST-PROJECT]

SEPTEMBER 17, 2015

SHEET 1 OF 2

RICK ENGINEERING COMPANY
5620 FRIARS ROAD
SAN DIEGO, CA 92110
619.291.0707
(FAX)619.291.4165
rickengineering.com
San Diego Riverside - Orange - San Luis Obispo - Bakersfield - Sacramento - Phoenix - Tucson

J-16693-A

© 2014 Rick Engineering Company

J:\16693_UPRC\WaterResource\16693drn_post01.dgn
J:\16693_UPRC\WaterResource\SD Exhibits 2005.dscript
18-SEP-2015 10:15

DRAINAGE LEGEND

- MAJOR DRAINAGE BASIN BOUNDARY
- SUB BASIN BOUNDARY
- XX.X AC. — DRAINAGE AREA
- XXX — DRAINAGE NODE NUMBER
- POINT OF INTEREST (POI)
- FLOW PATH
- EXISTING COBBLE DITCH
- PROPOSED STORM DRAIN

CONCEPTUAL DRAINAGE STUDY MAP FOR UNIVERSITY AND INNOVATION DISTRICT [POST-PROJECT]

SEPTEMBER 17, 2015

SHEET 2 OF 2

RICK ENGINEERING COMPANY
San Diego
5620 FRIARS ROAD
SAN DIEGO, CA 92110
619.291.0707
(FAX)619.291.4165
rickengineering.com
Riverside - Orange - San Luis Obispo - Bakersfield - Sacramento - Phoenix - Tucson

J-16693-A

© 2014 Rick Engineering Company

J:\16693_UPRC\WaterResource\16693drn_post02.dgn
J:\16693_UPRC\WaterResource\SD CorpStds 2005.dscript
18-SEP-2015 13:09